Genau Core Folding Ab Bench

User Manual

This translation was made automatically.

THANK YOU FOR YOUR PURCHASE!

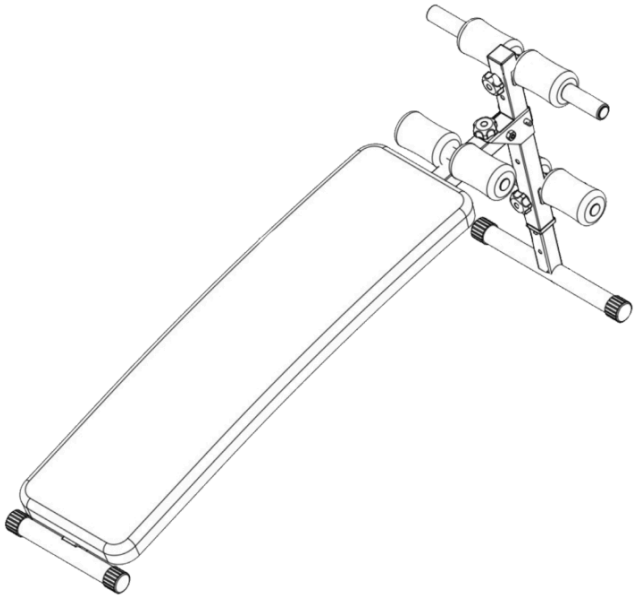

Thank you for purchasing the Genau Core ab bench. Please use the equipment correctly to ensure your safety and health. Before use, read the information below carefully.

Please read this manual before assembling and using the treadmill.

As part of our commitment to continuous improvement, the product may be updated when necessary without prior notice. If this manual does not match the product, the actual product takes precedence.

SAFETY INSTRUCTIONS

The translation of this section has not been reviewed yet. The official text is in Russian.

Note: Although the machine is designed and manufactured to be as safe as possible, certain precautions must be taken during use. Please read the manual carefully before installing and using the machine. Pay particular attention to the following points.

- Keep children and pets away from the machine. Do NOT leave children unattended in the room where it is installed.

- The machine is intended for use by one person at a time.
- If you feel dizzy or nauseous, have chest pain or any other symptoms, stop exercising immediately. SEEK MEDICAL ATTENTION URGENTLY.
- Place the machine on a flat, clean surface. Do NOT use it near water or outdoors.
- Keep your hands away from moving parts during use.
- Wear suitable sports clothing. Do not wear loose or snagging clothing. Sneakers or sports shoes are recommended.
- Perform exercises only as described in the instructions. Using methods not described in the manual is prohibited.
- Do not place sharp objects around the machine.
- People with disabilities must not use the machine without the supervision of an instructor or caregiver.
- Always warm up and stretch before exercising.
- If any fault is found, using the machine is prohibited.
- Record your workout results if necessary.
- The machine is not intended for medical use.

Warning! Consult a doctor before exercising. This is especially important for people over 35 or with medical indications. Always read the instructions carefully before using fitness equipment. The company is not liable for damage caused by the user's fault.

PRODUCT COMPONENTS

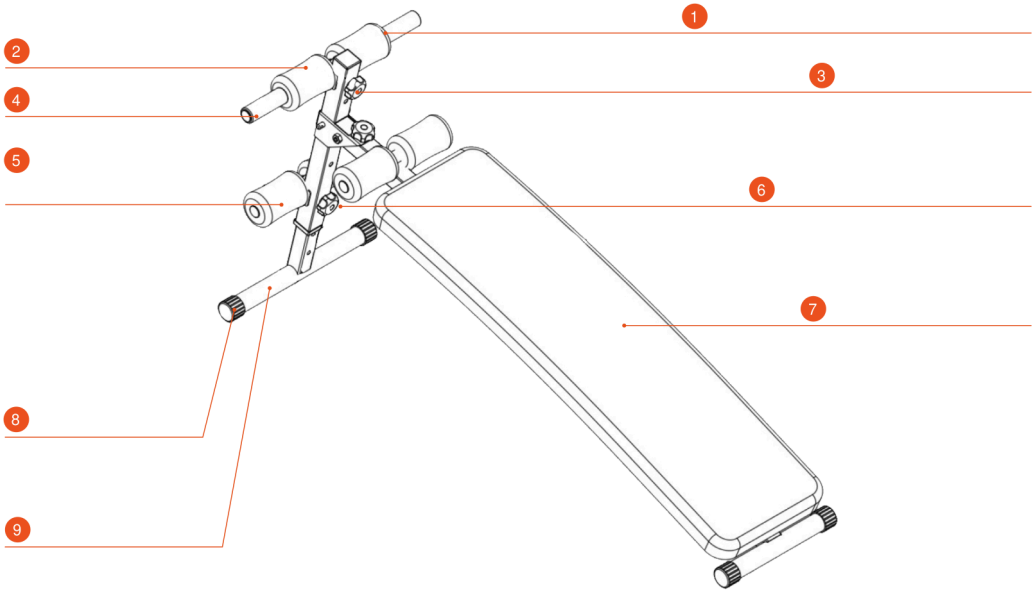

In the picture:

1. Upper foot-fixing unit with roller
2. Roller
3. Adjusting knob nut
4. Front handle unit
5. Lower foot-fixing roller unit
6. Lower adjusting knob nut
7. Pad (seat/backrest)
8. Support tube bushing
9. Front support tube

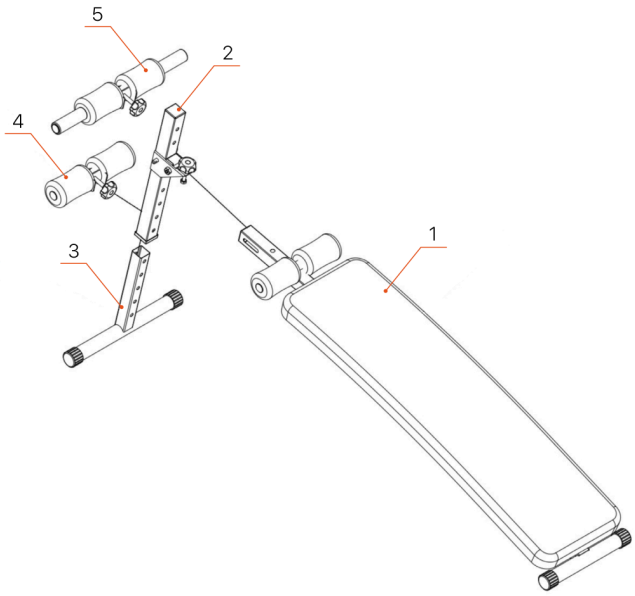

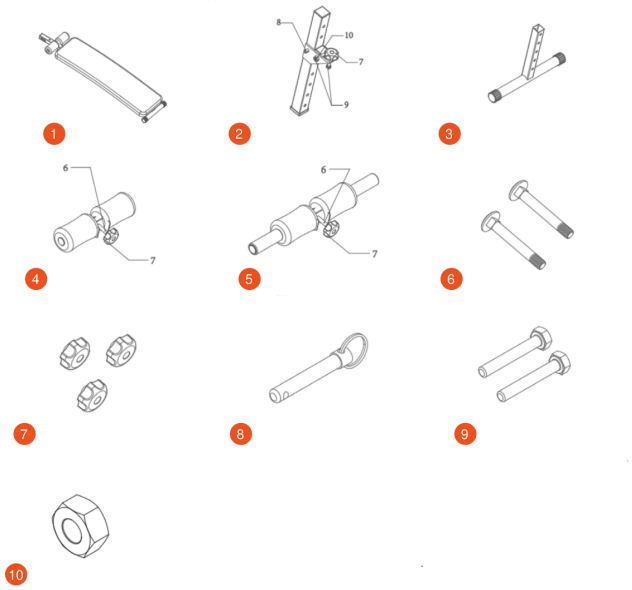

In the picture:

1. Main frame
2. Front support tube
3. Front leg tube
4. Lower foam foot support with hook
5. Upper foam foot support with hook
6. Square-neck carriage bolt M10×75, 2 pcs
7. Knob nut M10, 3 pcs
8. Eye bolt d10×60
9. Hex bolts M10×55, 2 pcs
10. Hex nut M10

ASSEMBLY

STEP 1

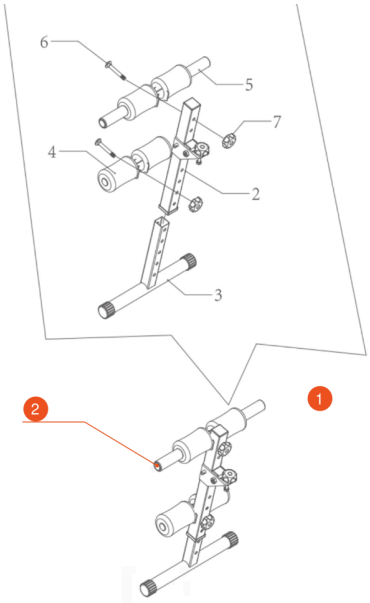

In the picture:

1. Figure A
2. Part A

- Take out (2) the front support tube assembly, (3) the front leg tube assembly, (4) the lower foam foot holder assembly, (5) the upper foam foot holder assembly, (6) carriage bolts M10×75 (2 pcs), (7) knob nuts M10 (2 pcs).
- As shown in Figure A, align the corresponding mounting holes and tighten the knob nuts (7) M10. Part A is now complete.

STEP 2

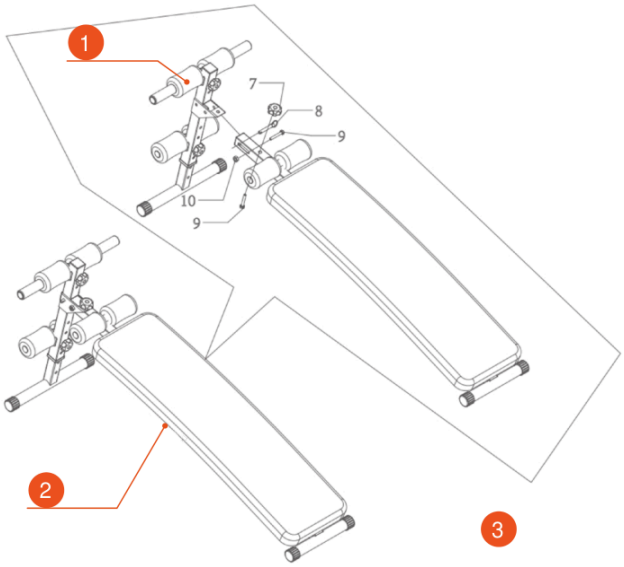

In the picture:

1. Part A
2. Part B
3. Figure B

- Take out: (1) the main frame, (7) knob nut M10 (1 pc), (9) hex head bolts M10×55 (2 pcs), (10) hex nut M10 (1 pc), (8) eye bolt d10×60 (1 pc).
- As shown in Figure B, align the parts by the mounting holes, then tighten the corresponding fasteners. Part B is now complete.

WORKOUT TIPS AND RECOMMENDATIONS

Warm-up and Cool-down

A successful exercise program consists of three parts: warm-up, cardio training and cool-down.

Warm-up is a very important part of a workout. A warm-up must be done before every workout. It helps warm up the body, stretch the muscles and allows the body to adapt to more intense exercise.

Repeating the warm-up at the end of the exercise can help relieve muscle soreness.

We suggest doing the appropriate warm-up and cool-down exercises according to the following scheme:

Head rolls

First pull your head toward your right shoulder, stretch your neck and turn your head once clockwise and once counterclockwise; pull your head toward your left shoulder and make one turn counterclockwise. Repeat.

Shoulder lifts

Raise your left shoulder and make 5 backward rotations; then raise your right shoulder and make 5 backward rotations, alternating sides.

Side stretch

Raise your arms above your head, then grasp your right wrist with your left hand and reach upward until you feel your right arm fully stretched. Hold for 5 seconds before switching to the other arm.

Quadriceps stretch

Holding onto a wall with your right hand for balance, pull your left foot back with your left hand, bringing the heel as close to your buttock as possible. Hold for 15 seconds, then repeat with the other leg.

Inner thigh stretch

Sitting on the floor, put the soles of your feet together, clasp them with both hands and pull them in as close to your body as possible. Slowly press down on both heels and hold this position for 15 seconds.

Toe touch

Slowly bend forward, relax your back and shoulders and reach for your toes. Bend as low as you can and hold the position for up to 15 seconds.

Hamstring stretch

Sit down, straighten your right leg, bend your left leg, grab your left ankle with your left hand and push it inward so that your left foot is as close to your torso as possible and the sole of the foot is against the inside of your right thigh. Then press forward with your body and reach both arms forward to touch your toes; the more pressure, the better. Hold this position for 15 seconds and switch to the left leg.

Calf stretch

Lean against a wall with both hands, tilt your body at a 45-degree angle to the floor and alternately move your left and right legs back, as if walking.

WARRANTY

The translation of this section has not been reviewed yet. The official text is in Russian.

Genau guarantees the high quality and reliability of its products. We strive to offer only the best, which is why all of our equipment comes with a warranty.

Attention! Find the official A4 warranty card in the box and keep it for the entire period of use of the equipment.

Note: If you did not find the warranty card in the box, please contact the service center.

Warranty Terms

1. The warranty period starts from the date of sale.
2. The warranty covers defects caused by manufacturing faults or defective materials.
3. Warranty service is carried out at authorized service centers.
4. If the product breaks down during the warranty period, the customer must bring this warranty card and the complete product to a service center for diagnostics and repair.

5. If the warranty claim is confirmed, the product will be repaired or replaced free of charge.
6. The warranty does not cover the following cases:

- mechanical damage caused by improper use or transportation;
- damage caused by liquids, fire, chemicals or other external factors;
- failures caused by not following the operating instructions;
- modifications to the design or repairs carried out by unauthorized persons without the approval of the Service;
- consumables and components with a limited service life (belts, batteries, etc.).

Warranty claims

To receive warranty service, the customer should contact the seller (the place where the equipment was purchased).

Full Genau warranty card

SERVICE

For questions about assembly, operation and warranty, please contact Genau service in Kyrgyzstan.

Genau GmbH LLC (ОсОО «Генау ГМБХ»), Kyrgyzstan. Phone: +996 778 639 000

Official website genau.kg