Genau Crown G530T Electric Treadmill

User Manual

This translation was made automatically.

THANK YOU FOR YOUR PURCHASE!

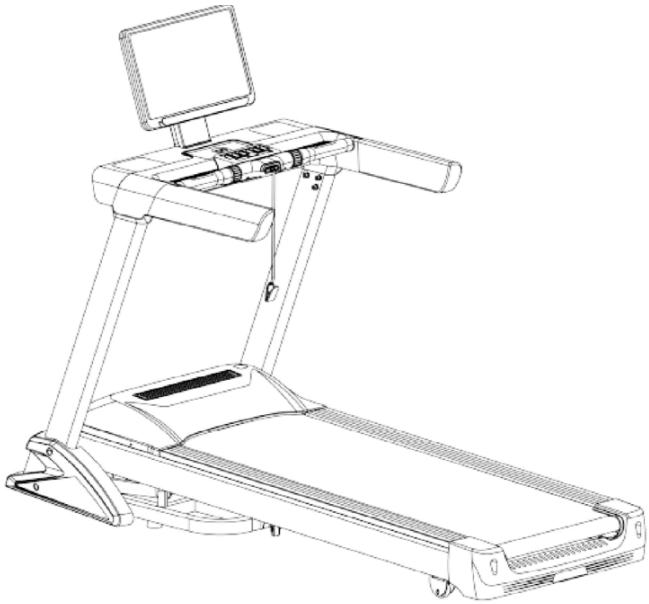

Thank you for purchasing the Genau Crown G530T treadmill. Please use the equipment correctly to ensure your safety and health. Read the information below carefully before use.

Please read this manual before assembling and using the treadmill.

As part of our commitment to continuous improvement, the product may be updated when necessary without prior notice. If this manual does not match the product, the actual product takes precedence.

SAFETY INSTRUCTIONS

The translation of this section has not been reviewed yet. The official text is in Russian.

Attention! Read the user manual before using the equipment. Keep this manual for the entire service life of the equipment.

Warning!

Before starting any fitness program, you should have a medical examination, especially if you:

- have high blood pressure, high cholesterol, diabetes, chronic respiratory disease or heart disease;
- have a family history of any of the above conditions;
- are pregnant;
- are over 35 years old;
- smoke and/or are obese;
- have not exercised regularly in the past year;
- have other chronic diseases or physical impairments, or are taking any medication.

If you experience dizziness, chest pain, nausea or any other abnormal symptoms while using the treadmill, stop exercising immediately. Consult a doctor before continuing.

Intended Use

- This model can be used for running or walking.
- Suitable for home use.

Note: Using the equipment for commercial or medical purposes is prohibited. All fitness equipment is intended for home use only and must not be used in commercial or public areas.

General Precautions

Indoor use only

The treadmill is suitable only for dry and clean rooms. Keep it away from moisture, dust and direct sunlight. Do not place the equipment near sources of heat or water, such as in a bathroom or kitchen.

Electrical safety

- Use only grounded outlets and do not share the outlet with other appliances.
- A damaged power cord must be replaced by a qualified professional.
- Unplug the treadmill when it is not in use.
- Do not touch the plug or wires with wet hands.
- In case of overheating or overload, the system shuts down automatically. Check the mains voltage and replace faulty parts if problems are found.

Use by children

- Children may use the equipment only under adult supervision.
- The equipment is not a toy.
- Children must not be near the treadmill without adult supervision.

Use by persons with disabilities or limited capacity

Persons with disabilities or limited capacity must be supervised by a doctor or a caregiver.

Clothing and footwear

Wear sportswear and athletic shoes. Avoid loose or baggy clothing that could get caught in the mechanisms and moving parts of the treadmill.

Installation site requirements

The owner is responsible for taking into account the space requirements around the treadmill during operation, voluntary and industry standards, fire safety regulations and other requirements of national legislation. Recommended minimum clearance around the equipment according to EU rules (since March 1, 2017): for access and passage, at least 0.5 m to the left, right and in front of the treadmill, and 2 m behind it.

Assembly requirements

Follow the assembly instructions and assemble the treadmill only on a level surface. Do not plug the treadmill in until assembly is complete. Make sure all assembly parts are present according to the parts list. If you have any difficulties with assembly, contact the seller.

Maximum user weight

Observe the maximum user weight stated in the specifications.

Prohibited actions

- Do not jump on the treadmill, rock it or run barefoot.
- Do not use the treadmill if assembly has not been fully completed or if internal mechanisms are exposed.
- Do not use the treadmill if it is defective or damaged.
- Do not use the treadmill if you feel unwell.
- Only one person may use the treadmill at a time.
- Do not use the treadmill under the influence of alcohol or drugs.
- Keep other people, pets and children away from moving parts during use — this may cause injury.

Operation and Safety

Warm-up

Always warm up your muscles before exercising.

Equipment inspection

Before each use, inspect the treadmill for wear of parts and moving components. Make sure the treadmill is fully functional and safe.

Running belt

To avoid injury, take special care when stepping onto or off the running belt.

Starting a workout and starting the belt

Stand on the side rails, press "Start" and wait until the belt starts moving at low speed. Then carefully step onto the belt. This reduces the load on the motor at startup.

Safety key

Always clip the safety key to your clothing. It will stop the treadmill in an emergency. Keep the key away from children.

Health monitoring

If you feel dizzy, have chest pain or feel unwell in any other way, stop exercising immediately and see a doctor. People over 35 or with chronic diseases are advised to consult a doctor before starting to exercise.

Disposal

The electronic components in this equipment are considered hazardous to the environment. Please dispose of them properly in accordance with national legislation.

Note: Please keep in mind that heart rate accuracy depends on a number of factors, including the user's physiology and age, how the equipment and the heart rate measurement system are used, external interference and other factors that may affect the accuracy of the collected and processed heart rate data. Therefore, non-medical equipment cannot guarantee accurate heart rate measurements.

PRODUCT COMPONENTS

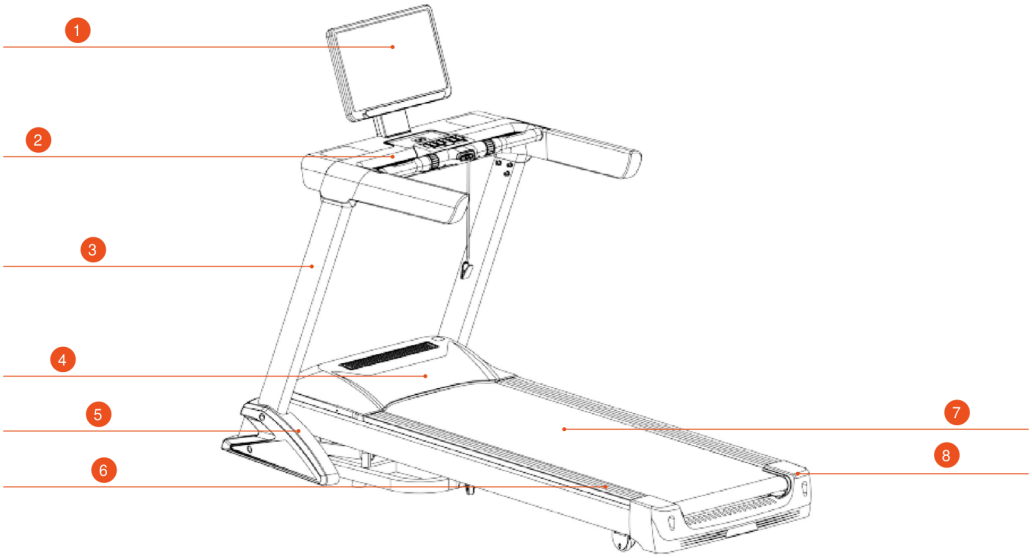

In the picture:

1. Console display
2. Console
3. Upright
4. Motor cover
5. Decorative cover
6. Side rail
7. Running belt
8. End cap

Accessory Bag Contents

No.	Item	Unit	Qty
1	Button head screw M10×50	pcs	4
2	Hex socket combination screw M8×20	pcs	10
3	Hex socket combination screw M8×50	pcs	2
4	Flat head tapping screw ST4×25	pcs	8
5	Hex key 6 mm	pcs	1
6	Safety key	pcs	1
7	Silicone lubricant	pcs	4
8	User manual	pcs	1

No.	Item	Unit	Qty
9	MP3 cable	pcs	1
10	Power cable	pcs	1

Packing List

No.	Item	Unit	Qty
1	Treadmill, assembled	set	1
2	Protective cover	set	1
3	Accessory bag	set	1

Scale: A ruler for measuring screw length is included in the printed manual. On a phone screen, the size does not match the actual size.

ASSEMBLY

During installation, first fit all screws loosely. Once the frame is fully assembled, tighten them completely.

STEP 1

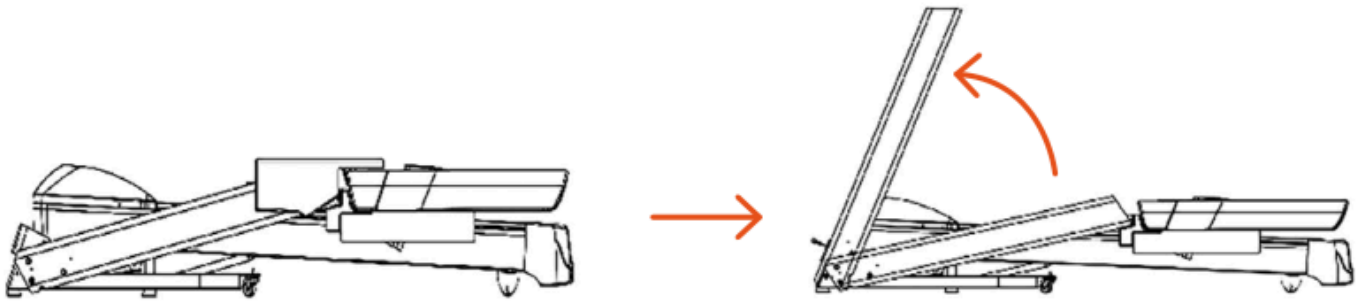

- Open the box, carefully take out the treadmill and place it on the floor.
- Remove the nylon cable ties that secure the main frame and uprights to the base and the foam packaging.
- Then rotate and raise the right and left uprights as shown in the figure (see Figure 1).

Note: The equipment is heavy — installation must be carried out by at least two people.

STEP 2

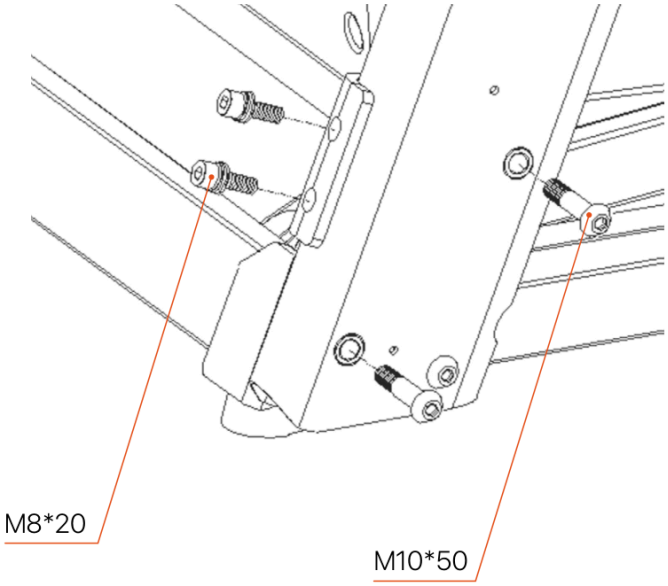

- Using the No. 6 hex key, insert the M10×50 screws and the M8×20 hex socket screws through the uprights and secure them (do not fully tighten).

STEP 3

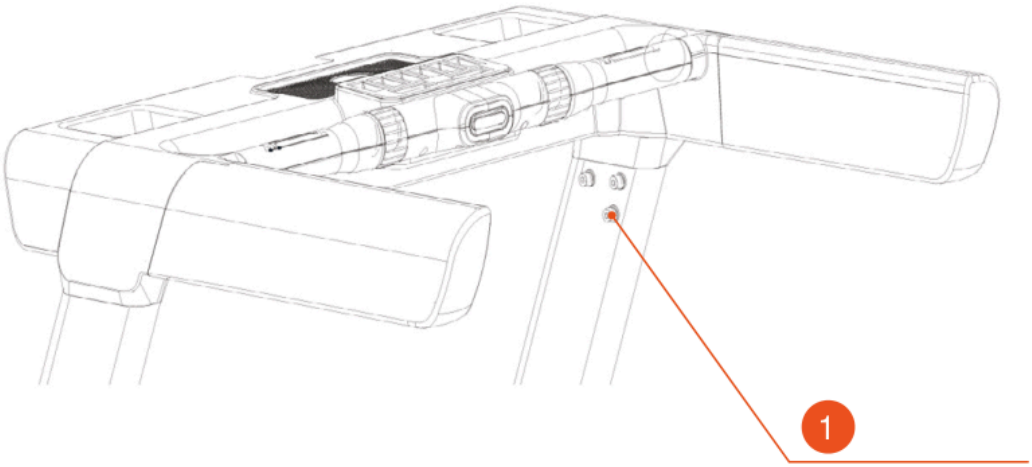

In the picture:

1. Screw M8×20

- Work in a team of three: 2 people lift the electronic panel to the top of the uprights; 1 person connects the signal cable from the right upright to the cable on the right side of the display.
- Tuck the cable inside the upright.
- Insert the panel into the uprights. Use the No. 6 key and M8×20 screws to secure it (do not fully tighten).

Note: Make sure the cable is not pinched or twisted!

STEP 4

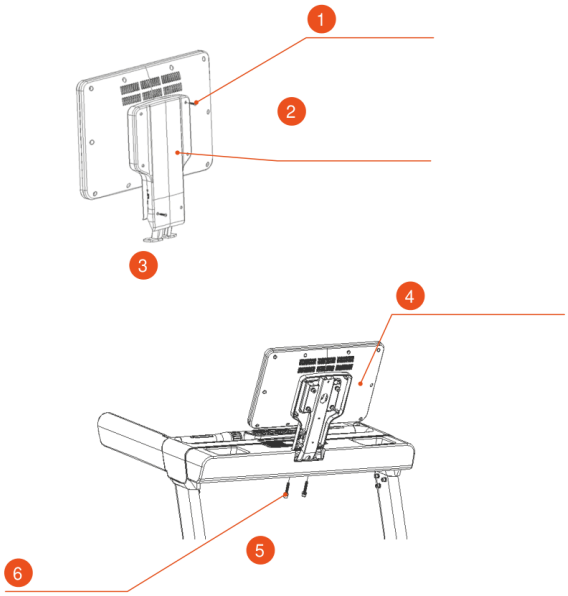

In the picture:

1. Screw ST4×25
2. Lower cover of the support frame
3. Figure 1
4. Console display
5. Figure 2
6. Screw M8×50

- Using a Phillips screwdriver, remove the lower cover of the support frame on the display unit and keep the two ST4×25 flat head screws (see Figure 1).
- Next, fit the mounting bracket onto the electronic panel and align it with the mounting holes (be careful not to pinch the wires).
- Secure it with the M8×50 hex socket screws (see Figure 2).

STEP 5

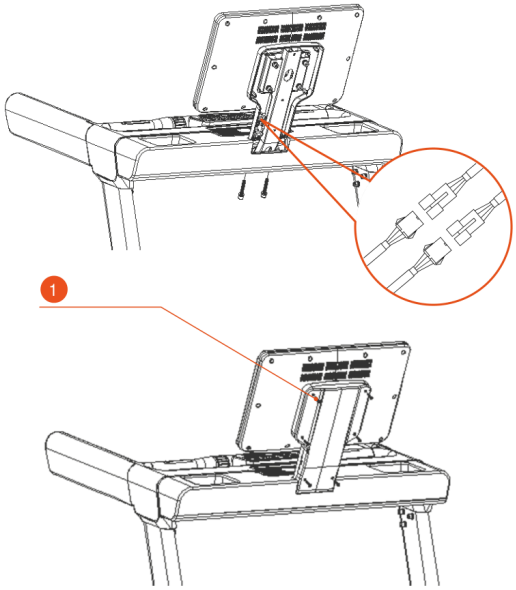

In the picture:

1. Screw ST4×25

- Connect the signal wires coming from the console and from the unit one by one (one to one).
- Tuck the remaining wires inside the housing.
- Then use a Phillips screwdriver to screw the lower cover of the support frame back on with the ST4×25 screws.

STEP 6

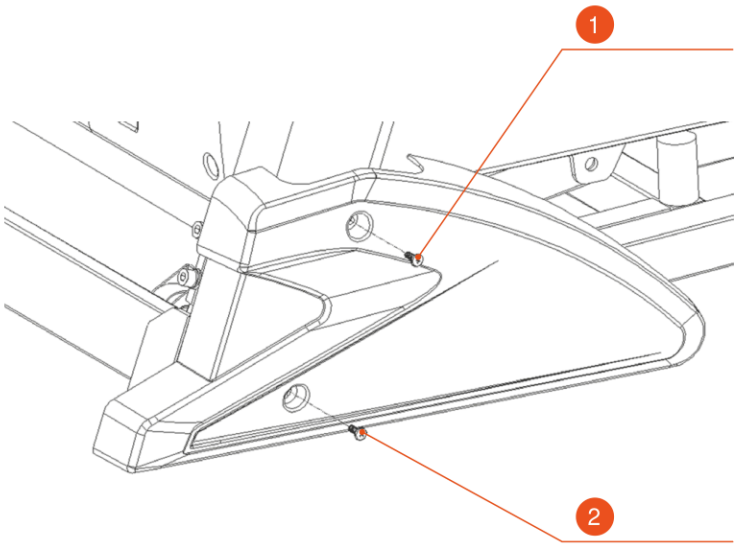

In the picture:

1. Screw M5×14
2. Screw M5×14

- Before proceeding to Step 4, fully tighten all screws. If this is a multifunction model, perform this step at the very end of assembly.
- First, use a Phillips screwdriver to remove the M5×14 screws on the left and right sides of the base.
- Then use the same screws to attach the protective covers on both sides.

Note: The steps above apply to the single-function treadmill. For the multifunction model, after completing these steps, continue the installation according to the instructions below.

STEP 7

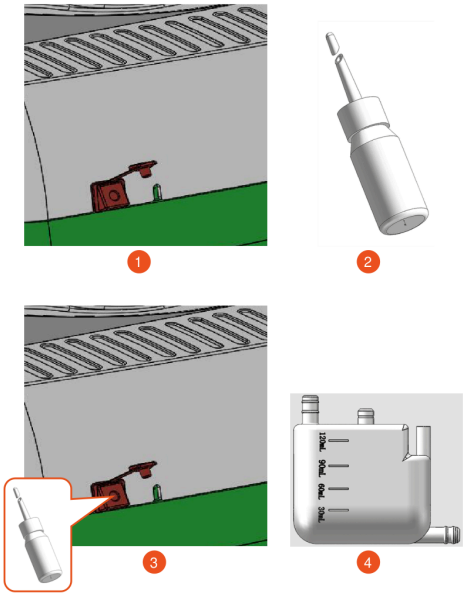

In the picture:

1. Figure 1
2. Figure 2
3. Figure 3
4. Figure 4

The treadmill must be lubricated before first use. How to add silicone lubricant:

- At the front of the motor cover, open the lubricant compartment lid (see Figure 1);
- Cut off the tip of the lubricant tube with scissors (see Figure 2);
- Align the opening of the lubricant bottle with the inlet on the treadmill (see Figure 3), then squeeze the oil in and close the lid.
- Add no more than 50 ml of oil (do not exceed 100 ml — see Figure 4, otherwise it will overflow).
- Keep the remaining two bottles. When the oil from the first one runs out, add the next bottles in the same way.

STEP 8

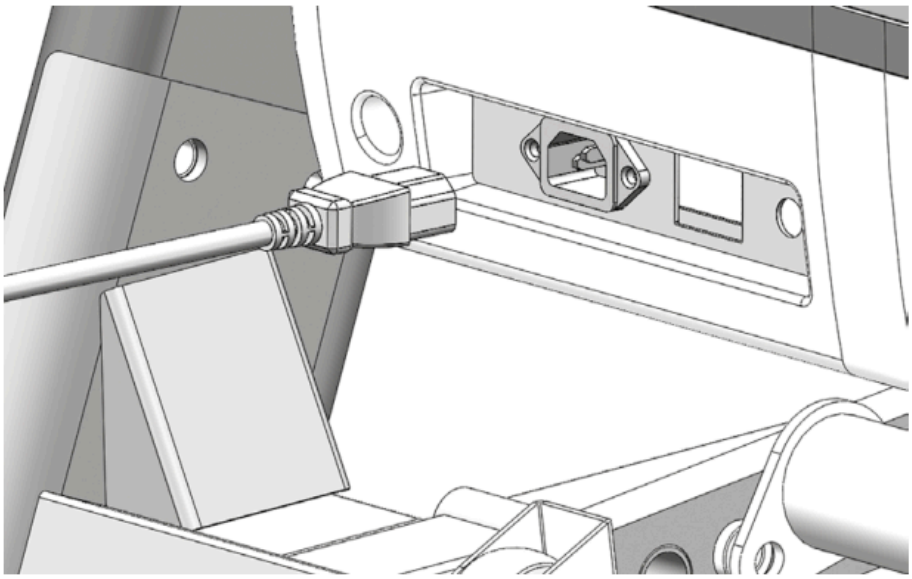

- Connect the power cable to the socket on the treadmill (see the picture).

STEP 9

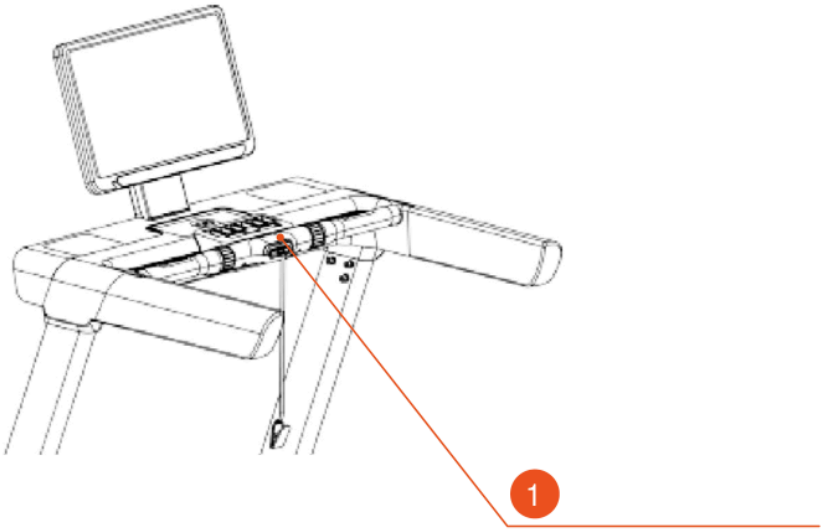

In the picture:

1. Safety key

- Install the safety key as shown in the figure — the treadmill works only when the key is in place and the Start/Pause button is pressed.
- The safety key is red. Inside the tool bag there is a red piece with a magnet and a cord — this is the key.
- Place the magnetic end on the yellow sticker under the control panel.

Note: The treadmill can be started only if the magnetic key is placed on the yellow sticker under the control panel.

Note: It is important to make sure that all installation steps have been completed as required. Only then tighten all screws evenly. Connect the power only after checking that nothing has been missed and everything is assembled correctly.

LEVELLING WITH THE FLOOR

If there is a gap between the rear rollers and the floor, turn the adjustment wheel at the rear counterclockwise until the rollers touch the floor.

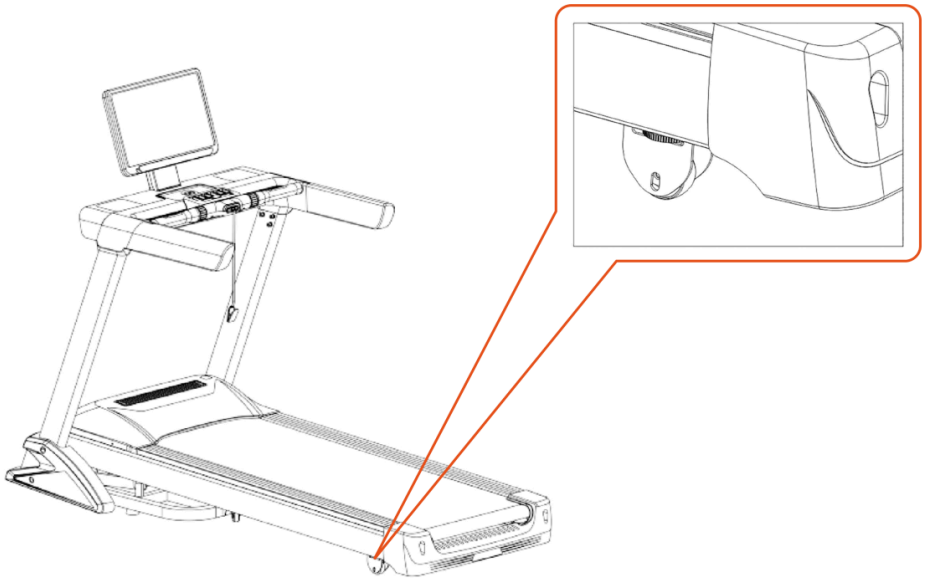

OPERATING INSTRUCTIONS

Using the Treadmill

- Connect the power and turn on the switch (red) — it will light up.
- You will then hear a "beep" and the display will turn on. (If a color display is used, wait for the start screen to appear.)

When not in use, keep the safety key out of the reach of children. Also keep the lubricant bottles from the kit away from children. If swallowed or if it gets into the eyes, rinse with clean water and consult a doctor.

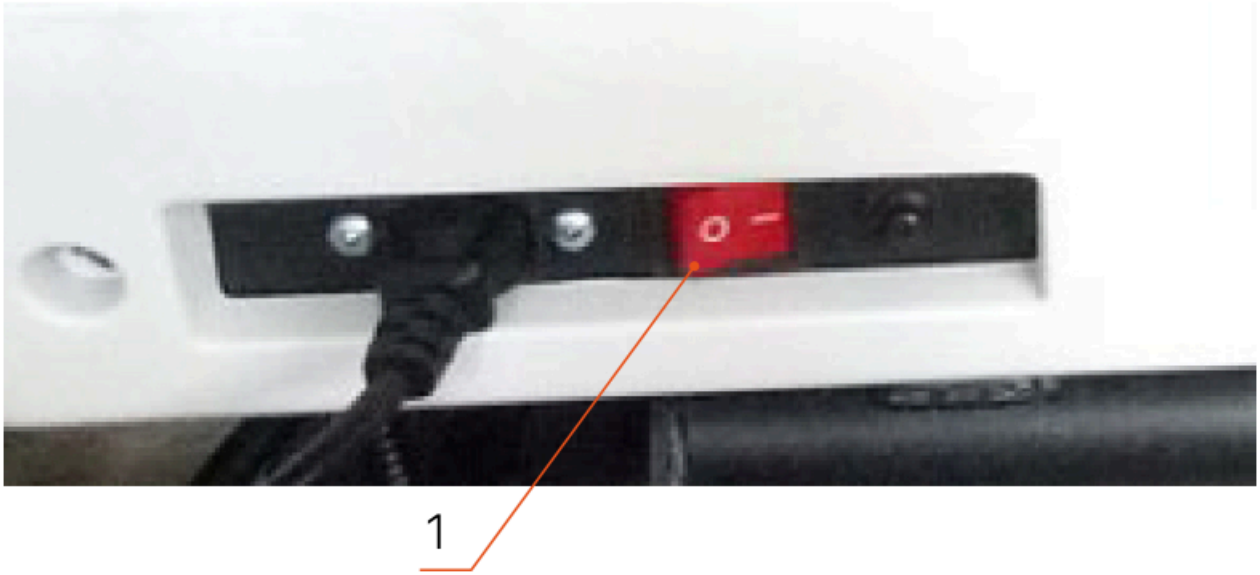

Safety Key

- The treadmill works only if the safety key is correctly placed on the yellow sticker under the control panel.
- Clip the key clip to your clothing.
- In an emergency, pull out the key to stop the motor immediately.
- To continue, put the key back.

Folding the Treadmill

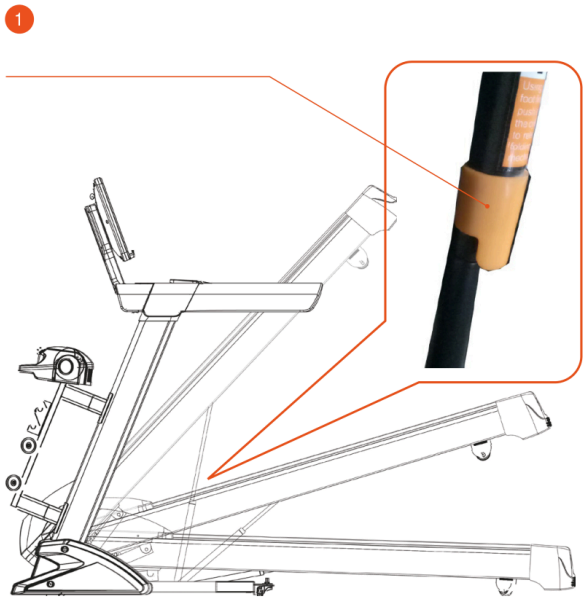

In the picture:

1. Press here to lower the treadmill

- The treadmill can be folded to save space.
- Before doing so, turn off the power and unplug the treadmill.
- Lift the running deck by hand until it locks.

Lowering the Running Deck

- Press the spring with your foot, pull the deck down, then let go — it will lower smoothly.

CONSOLE OPERATION

Power on

Press the "Start/Pause" button to start the treadmill.

Number of programs

3 manual programs and several preset programs.

Attention! For your safety, use the key during your workout!

Safety key function

If the key is removed, "E7" appears on the display, the treadmill stops immediately and a "beep-beep-beep" sounds. After the key is put back, the data on the display is reset.

In all cases, removing the key instantly stops the treadmill and displays a message on the screen. After the key is put back, the system restarts and returns to the home screen.

Button Functions

Name	Description
Start/Pause	When the treadmill is stopped, press the "Start/Pause" button to start it. (If the treadmill is running, pressing "Start/Pause" pauses it, and pressing it again resumes.)
Stop	While the treadmill is running, press the "Stop" button — all data will be reset, and after coming to a complete stop the treadmill will return to manual mode.
Program	In standby mode, pressing this button switches between manual mode and the preset programs. Manual mode is the default.
Mode	In standby mode, press this button to switch between the three countdown modes: by time, by distance, by calories. Use the speed up and down buttons to set the value, then press Start/Pause to start the treadmill.
Speed +	After the treadmill has started, pressing Speed + increases the speed step by step.
Speed –	After the treadmill has started, pressing Speed – decreases the speed step by step.
Incline +	While the treadmill is running, pressing Incline + increases the incline angle.
Incline –	While the treadmill is running, pressing Incline – decreases the incline angle.

Note: If you cannot connect via Bluetooth, check whether an MP3 cable is plugged into the AUX port or a USB drive into the USB port. If so, disconnect them before connecting via Bluetooth.

Display Functions

Name	Description
Speed	Shows the current speed.
Time	Shows the workout time in manual mode, or the countdown in other modes and programs.

Name	Description
Distance	Shows the accumulated distance in manual mode and programs, or the distance countdown.
Calories	Shows the calories burned during the workout in manual mode and programs, or the calorie countdown.
Heart rate measurement	With the treadmill switched on, hold the pulse sensor — your heart rate will be shown on the display.

The data is provided for reference only and is not a medical measurement.

PRESET PROGRAMS

Set time / 16 = duration of each period.

Program / Segment	1	2	3	4	5	6	7	8	9	10	11	12	13	14	15	16
P1 · Speed	1	2	3	4	5	6	7	8	8	6	6	5	4	3	2	1
P1 · Incline	0	1	1	1	1	2	2	2	2	3	3	3	3	2	2	1
P2 · Speed	1	2	4	5	8	8	10	10	12	10	10	8	6	4	2	1
P2 · Incline	1	2	3	4	4	4	3	2	3	4	4	2	3	2	2	1
P3 · Speed	1	4	8	6	4	2	4	6	8	6	4	2	4	7	4	2
P3 · Incline	1	2	3	4	5	3	5	4	3	2	4	4	3	2	1	0
P4 · Speed	2	4	8	10	8	6	4	4	4	6	8	10	8	6	4	2
P4 · Incline	1	2	3	4	5	6	7	8	6	6	5	4	3	2	1	0
P5 · Speed	2	4	8	8	6	4	4	4	8	10	10	6	4	3	1	1
P5 · Incline	2	4	6	4	3	2	0	1	1	2	2	2	3	3	2	1
P6 · Speed	3	4	5	6	7	8	9	10	11	11	12	12	9	6	4	3
P6 · Incline	1	3	5	5	5	4	4	2	4	2	4	2	4	2	4	1
P7 · Speed	1	4	4	6	6	6	6	6	4	4	4	4	4	2	4	1
P7 · Incline	1	2	3	3	4	4	5	5	6	6	7	7	4	3	2	1
P8 · Speed	1	4	6	7	7	8	8	9	9	8	7	6	5	5	3	1
P8 · Incline	1	2	2	2	3	3	3	3	4	4	4	5	5	5	3	1

Program / Segment	1	2	3	4	5	6	7	8	9	10	11	12	13	14	15	16
P9 · Speed	1	2	2	3	4	4	5	5	6	6	7	7	8	8	9	3
P9 · Incline	2	2	2	2	2	3	3	3	3	4	4	4	4	3	2	1
P10 · Speed	1	3	6	8	6	8	6	8	6	8	6	8	6	8	6	3
P10 · Incline	1	1	1	2	2	2	3	3	3	2	2	2	2	1	1	0
P11 · Speed	1	2	4	6	8	6	4	2	4	6	8	6	4	2	4	2
P11 · Incline	2	3	3	3	3	4	4	4	4	5	5	5	5	4	3	2
P12 · Speed	1	2	3	4	5	6	7	8	9	1	2	3	4	5	6	2
P12 · Incline	1	2	3	4	5	6	7	8	9	8	7	6	5	4	3	2
P13 · Speed	1	2	2	3	3	4	4	5	4	2	4	4	5	4	2	1
P13 · Incline	0	0	0	0	0	0	0	0	0	0	0	0	0	0	0	0
P14 · Speed	1	1	3	2	3	5	4	5	4	2	3	5	4	3	3	2
P14 · Incline	1	1	2	3	4	3	5	3	3	2	1	2	2	0	0	0
P15 · Speed	1	1	2	3	5	6	4	4	3	2	3	5	4	2	3	2
P15 · Incline	1	1	2	3	4	5	3	3	2	0	2	3	3	2	1	0
P16 · Speed	1	1	2	2	4	4	5	3	4	2	3	4	4	3	2	1
P16 · Incline	1	2	3	4	5	2	4	5	2	1	3	3	3	2	1	1
P17 · Speed	1	2	4	6	8	5	4	4	3	2	5	5	2	2	3	2
P17 · Incline	1	2	3	5	3	4	5	4	2	0	3	2	2	1	1	1
P18 · Speed	1	3	5	7	9	6	5	4	4	1	7	6	5	4	4	1
P18 · Incline	1	1	3	5	4	3	5	3	2	1	4	3	3	3	2	1
P19 · Speed	2	4	5	7	7	7	6	5	4	1	3	7	5	4	2	1
P19 · Incline	0	0	0	3	4	3	6	5	5	0	2	2	3	2	2	0
P20 · Speed	3	5	6	8	10	10	8	4	3	3	6	5	8	6	3	2
P20 · Incline	1	4	3	2	4	5	4	3	2	0	4	3	3	1	1	0
P21 · Speed	1	3	5	10	5	10	5	10	3	1	6	7	5	4	4	2
P21 · Incline	0	5	9	7	6	5	4	2	1	0	2	3	2	3	1	0

Program / Segment	1	2	3	4	5	6	7	8	9	10	11	12	13	14	15	16
P22 · Speed	1	3	5	6	5	7	8	5	3	1	4	6	5	3	2	1
P22 · Incline	1	3	3	3	4	5	4	2	1	0	2	2	3	1	1	0
P23 · Speed	1	3	4	8	3	8	4	7	4	1	3	4	4	5	4	2
P23 · Incline	1	2	2	3	4	5	7	4	2	1	2	1	1	1	1	0
P24 · Speed	2	1	5	5	7	7	8	5	4	1	5	6	6	5	3	2
P24 · Incline	2	3	2	5	5	5	4	3	3	1	5	5	4	2	2	0

ERROR CODES AND TROUBLESHOOTING

Error code	Problem description	Possible cause and solution
E1	Communication error: when the power is turned on, the connection between the lower controller and the console is lost.	Check the cable between the console and the controller. Make sure every connector is fully plugged in. If the cable is damaged, replace it.
E2	No signal from the motor.	Check that the motor cable is connected correctly. If not, reconnect it. Check the cable for damage or a burning smell. If present, replace the motor.
E5	Overcurrent protection: during operation, the controller detects a current above 6 A for more than 3 seconds.	An overload may trigger the protection or stop the motor because of jamming. Restart the treadmill. Check the motor for liquid or a burning smell — if present, replace the motor. If the controller has burned out, replace it. Check the supply voltage. If it is out of range, connect the correct voltage and test again.
E6	Surge protection: abnormal voltage or a fault in the motor power circuit.	Check whether the voltage is too low (less than 50% of nominal). Use the correct voltage and test again. If the controller has burned out, replace it. Make sure the motor cable is connected correctly.
E7	Safety key missing.	Place the safety key in the correct position (the yellow mark on the console).

CARE, STORAGE AND MAINTENANCE

Important! To extend the service life of the treadmill, take a ten-minute break every 1–1.5 hours of operation.

Maintenance

Regular cleaning

Turn off the power before cleaning and use a minimal amount of water and soapy solution to prevent moisture from getting onto electrical parts.

Clean the running belt and other parts of the treadmill regularly. After each workout, wipe down the entire treadmill, including the console, with a mild soapy solution, then dry it thoroughly with a dry cloth. Simple care will keep the equipment looking great for many years. Do not use abrasive or rough brushes and cloths, as they may damage the surface of the equipment. Do not let cleaning agents or liquids get onto the surface of the equipment. Do not use harsh chemicals or solvents to clean the treadmill.

Note: This model is made of durable materials. The plastic parts are made of strong, chemically resistant ABS, the frame is made of high-strength steel with an industrial powder coating to protect against corrosion, and the metal parts have an anti-corrosion coating. However, keep in mind that sweat left on the surface of the treadmill can be highly aggressive to the materials if not removed promptly.

Adding Lubricant to the Treadmill

The treadmill is pre-lubricated at the factory. However, over time the friction between the belt and the deck affects the service life of the machine, so regular lubrication is required.

Recommendations:

- Users with < 3 hours of use per week — lubricate once every 10 months;
- Users with > 7 hours of use per week — lubricate once every 5 months.

First lubrication (before use)

- Remove the oil compartment lid at the front of the motor and cut off the tip of the lubricant tube.
- Align the bottle with the opening in the housing and squeeze the oil into the reservoir.
- Close the lid.
- For first use, add 50 ml (do not exceed 100 ml — it may overflow).
- Keep the remaining 2 bottles and add them later when needed.

Automatic lubrication

After lubricant has been added to the oil tank, the system will automatically dispense lubricant every 30 km of use.

Each dose lasts 3 seconds (approximately 2.5 ml at a time).

With an LCD display

Turn on the treadmill, then press and hold "Start/Pause" for 3 seconds — lubricant will be dispensed automatically. To repeat, turn off the power, restart the machine and repeat.

With a TFT display

Go to the menu: Settings → Automatic Oiling → Oil Adding (the default value can be changed)

Manual lubrication

If the treadmill has not been used for more than 3 months, the oil may have evaporated due to temperature. You can add lubricant manually:

- Lift the running belt
- Squeeze the oil onto the surface of the deck (see the figure)

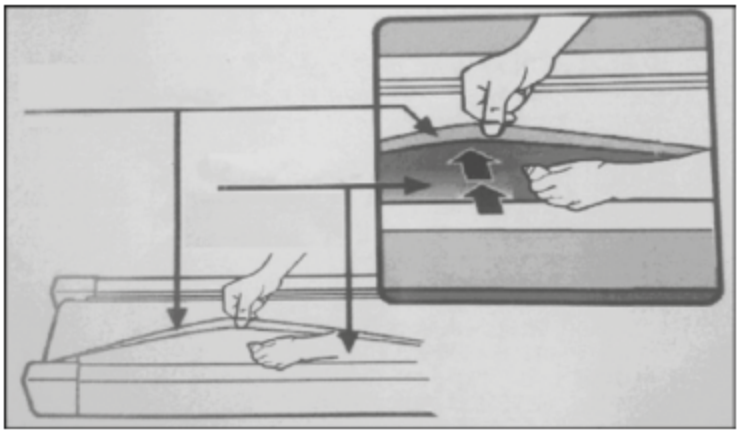

Running Belt Adjustment

Check and adjust the tension and alignment of the running belt to prevent wear and ensure safe operation.

Checking belt alignment

Make sure the treadmill is placed on a level surface. Run the belt at 3–8 km/h and watch how it moves. If the belt drifts to the left or right, use the adjustment bolts to correct its position.

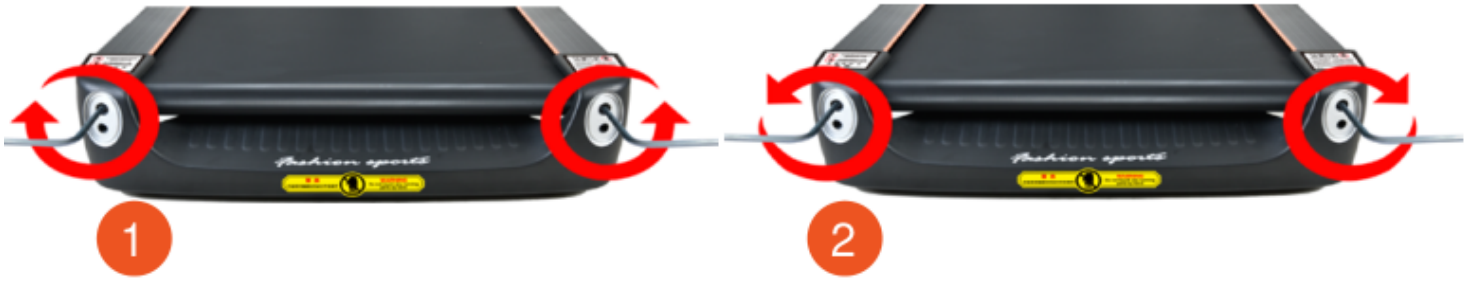

In the picture:

1. Belt drifting to the left
2. Belt drifting to the right

Belt drifting to the left

- Turn the left adjustment bolt 1/2 turn clockwise.
- Then turn the right adjustment bolt 1/2 turn counterclockwise.
- Check the belt position after 1–2 minutes. If the belt has not returned to the center, repeat the procedure.

Belt drifting to the right

- Turn the right adjustment bolt 1/2 turn clockwise.
- Then turn the left adjustment bolt 1/2 turn counterclockwise.
- Check the belt position after 1–2 minutes. Repeat the adjustment if necessary.

Adjusting belt tension

- If the belt is too loose, it may slip during operation. To check the tension, run the treadmill at 1 km/h and press lightly on the belt with your foot.
- If the belt stops while the motor and rollers keep running, the tension is too loose and must be tightened.
- Turn the adjustment bolts at both ends of the belt 1/2 turn clockwise. Make sure you turn both bolts the same number of times for even tension.
- Check the tension again and make sure the belt does not slip but is not overtightened.

Avoid overtightening

- Do not overtighten the running belt, as this puts excessive pressure on the front and rear roller bearings, causing squeaking and accelerated wear.
- With correct tension, you can slightly lift the edges of the belt by 50–70 mm on both sides.

Storing the Treadmill

Recommended storage and operating conditions

- Temperature: +10...+35 °C.
- Humidity: 50–75%.
- Acclimatization: if the treadmill has been stored at low temperature or high humidity (there are signs of condensation), keep it under normal conditions for at least 2–4 hours before use. Only then may you start using the treadmill.

WORKOUT TIPS AND RECOMMENDATIONS

Warm-up and Cool-down

A successful exercise program consists of three parts: warm-up, cardio training and cool-down.

The warm-up is a very important part of a workout. A warm-up should be done before every workout. It helps warm up the body, stretch the muscles and allow the body to adapt to more intense exercise. Repeating the warm-up at the end of the exercise can help relieve muscle soreness.

We suggest doing the appropriate warm-up and cool-down exercises according to the following scheme:

Head rolls

First tilt your head toward your right shoulder, stretch your neck and rotate your head once clockwise and once counterclockwise; then tilt your head toward your left shoulder and make one counterclockwise rotation. Repeat.

Shoulder lifts

Raise your left shoulder and make 5 backward rotations; then raise your right shoulder and make 5 backward rotations, alternating sides.

Side stretch

Raise your arms above your head, then grasp your right wrist with your left hand and reach upward until you feel your right arm fully stretched. Hold for 5 seconds before switching to the other arm.

Quadriceps stretch

Holding onto a wall with your right hand for balance, pull your left foot back with your left hand, bringing the heel as close to your buttock as possible. Hold for 15 seconds, then repeat with the other leg.

Inner thigh stretch

Sitting on the floor, put the soles of your feet together, clasp them with both hands and pull them in as close to your body as possible. Slowly press down on both heels and hold this position for 15 seconds.

Toe touch

Slowly bend forward, relax your back and shoulders and reach for your toes. Bend as low as you can and hold the position for up to 15 seconds.

Hamstring stretch

Sit down, straighten your right leg and bend your left leg. Hold your left ankle with your left hand and pull it inward so that your left foot is as close to your body as possible, with the sole against the inner side of your right thigh. Then lean your body forward and reach both hands toward your toes — the deeper the stretch, the better. Hold this position for 15 seconds, then switch legs.

Calf stretch

Lean against a wall with both hands, tilt your body at a 45-degree angle to the floor and alternately move your left and right legs back, as if walking.

WARRANTY

The translation of this section has not been reviewed yet. The official text is in Russian.

Genau guarantees the high quality and reliability of its products. We strive to offer only the best, which is why all of our equipment comes with a warranty.

Attention! Find the official A4 warranty card in the box and keep it for the entire period of use of the equipment.

Note: If you did not find the warranty card in the box, please contact the service center.

Warranty Terms

1. The warranty period starts from the date of sale.
2. The warranty covers defects caused by manufacturing faults or defective materials.
3. Warranty service is carried out at authorized service centers.
4. If the product breaks down during the warranty period, the customer must bring this warranty card and the complete product to a service center for diagnostics and repair.
5. If the warranty claim is confirmed, the product will be repaired or replaced free of charge.
6. The warranty does not cover the following cases:

- mechanical damage caused by improper use or transportation;
- damage caused by liquids, fire, chemicals or other external factors;
- failures caused by not following the operating instructions;
- modifications to the design or repairs carried out by unauthorized persons without the approval of the Service;
- consumables and components with a limited service life (belts, batteries, etc.).

Warranty claims

To receive warranty service, the customer should contact the seller (the place where the equipment was purchased).

Full Genau warranty card

SPECIFICATIONS

Parameter	Value
Rated voltage	220–240 V~
Rated frequency	50–60 Hz
Rated power	1600 W
Peak power	3600 W (6.0 hp)
Speed range	1.0–20 km/h
Running belt size	580 × 1450 mm
Maximum user weight	180 kg
Net weight	102 kg
Dimensions in use	2040 × 930 × 1530 mm
Functions	Running (with sit-up bench, dumbbells and massager)

Manufacturer: Zhejiang Lijiujia Sports Equipment Co., Ltd. ADD No.88 Yuegui South Road, Xicheng Street, Yongkang, Zhejiang, China.

SERVICE

For questions about assembly, operation and warranty, please contact Genau service in Kyrgyzstan.

Genau GmbH LLC (ОсОО «Генау ГМБХ»), Kyrgyzstan. Phone: +996 778 639 000

Official website genau.kg