Genau Nordic 70 Electric Treadmill

User Manual

This translation was made automatically.

THANK YOU FOR YOUR PURCHASE!

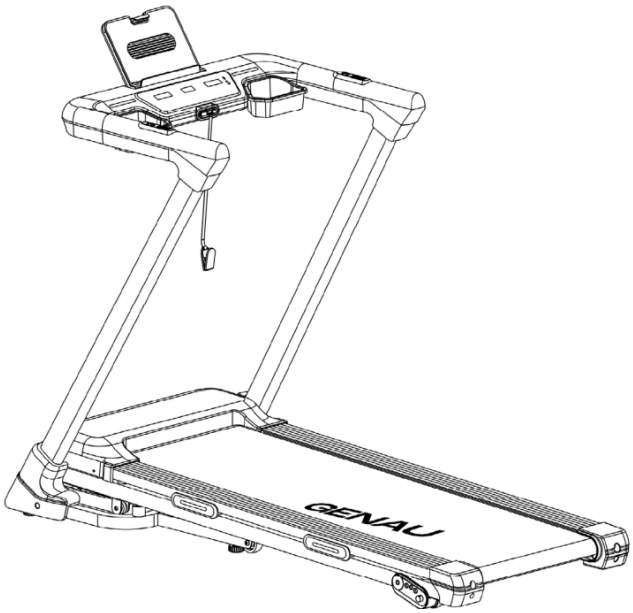

Thank you for purchasing the Genau Nordic 70 treadmill. Please use the equipment correctly to ensure your safety and health. Read the information below carefully before use.

Please read this manual before assembling and using the treadmill.

As part of our commitment to continuous improvement, the product may be updated when necessary without prior notice. If this manual does not match the product, the actual product takes precedence.

SAFETY INSTRUCTIONS

The translation of this section has not been reviewed yet. The official text is in Russian.

Attention! Read the user manual before using the equipment. Keep this manual for the entire service life of the equipment.

Warning!

Before starting any fitness program, you should have a medical examination, especially if you:

- have high blood pressure, high cholesterol, diabetes, chronic respiratory disease or heart disease;
- have a family history of any of the above conditions;
- are pregnant;
- are over 35 years old;
- smoke and/or are obese;
- have not exercised regularly in the past year;
- have other chronic diseases or physical impairments, or are taking any medication.

If you experience dizziness, chest pain, nausea or any other abnormal symptoms while using the treadmill, stop exercising immediately. Consult a doctor before continuing.

Intended Use

- This model can be used for running or walking.
- Suitable for home use.

Note: Using the equipment for commercial or medical purposes is prohibited. All fitness equipment is intended for home use only and must not be used in commercial or public areas.

General Precautions

Indoor use only

The treadmill is suitable only for dry and clean rooms. Keep it away from moisture, dust and direct sunlight. Do not place the equipment near sources of heat or water, such as in a bathroom or kitchen.

Electrical safety

- Use only grounded outlets and do not share the outlet with other appliances.
- A damaged power cord must be replaced by a qualified professional.
- Unplug the treadmill when it is not in use.
- Do not touch the plug or wires with wet hands.
- In case of overheating or overload, the system shuts down automatically. Check the mains voltage and replace faulty parts if problems are found.

Use by children

- Children may use the equipment only under adult supervision.
- The equipment is not a toy.
- Children must not be near the treadmill without adult supervision.

Use by persons with disabilities or limited capacity

Persons with disabilities or limited capacity must be supervised by a doctor or a caregiver.

Clothing and footwear

Wear sportswear and athletic shoes. Avoid loose or baggy clothing that could get caught in the mechanisms and moving parts of the treadmill.

Installation site requirements

The owner is responsible for taking into account the space requirements around the treadmill during operation, voluntary and industry standards, fire safety regulations and other requirements of national legislation. Recommended minimum clearance around the equipment according to EU rules (since March 1, 2017): for access and passage, at least 0.5 m to the left, right and in front of the treadmill, and 2 m behind it.

Assembly requirements

Follow the assembly instructions and assemble the treadmill only on a level surface. Do not plug the treadmill in until assembly is complete. Make sure all assembly parts are present according to the parts list. If you have any difficulties with assembly, contact the seller.

Maximum user weight

Observe the maximum user weight stated in the specifications.

Prohibited actions

- Do not jump on the treadmill, rock it or run barefoot.
- Do not use the treadmill if assembly has not been fully completed or if internal mechanisms are exposed.
- Do not use the treadmill if it is defective or damaged.
- Do not use the treadmill if you feel unwell.
- Only one person may use the treadmill at a time.
- Do not use the treadmill under the influence of alcohol or drugs.
- Keep other people, pets and children away from moving parts during use — this may cause injury.

Operation and Safety

Warm-up

Always warm up your muscles before exercising.

Equipment inspection

Before each use, inspect the treadmill for wear of parts and moving components. Make sure the treadmill is fully functional and safe.

Running belt

To avoid injury, take special care when stepping onto or off the running belt.

Starting a workout and starting the belt

Stand on the side rails, press "Start" and wait until the belt starts moving at low speed. Then carefully step onto the belt. This reduces the load on the motor at startup.

Safety key

Always clip the safety key to your clothing. It will stop the treadmill in an emergency. Keep the key away from children.

Health monitoring

If you feel dizzy, have chest pain or feel unwell in any other way, stop exercising immediately and see a doctor. People over 35 or with chronic diseases are advised to consult a doctor before starting to exercise.

Disposal

The electronic components in this equipment are considered hazardous to the environment. Please dispose of them properly in accordance with national legislation.

Note: Please keep in mind that heart rate accuracy depends on a number of factors, including the user's physiology and age, how the equipment and the heart rate measurement system are used, external interference and other factors that may affect the accuracy of the collected and processed heart rate data. Therefore, non-medical equipment cannot guarantee accurate heart rate measurements.

PRODUCT COMPONENTS

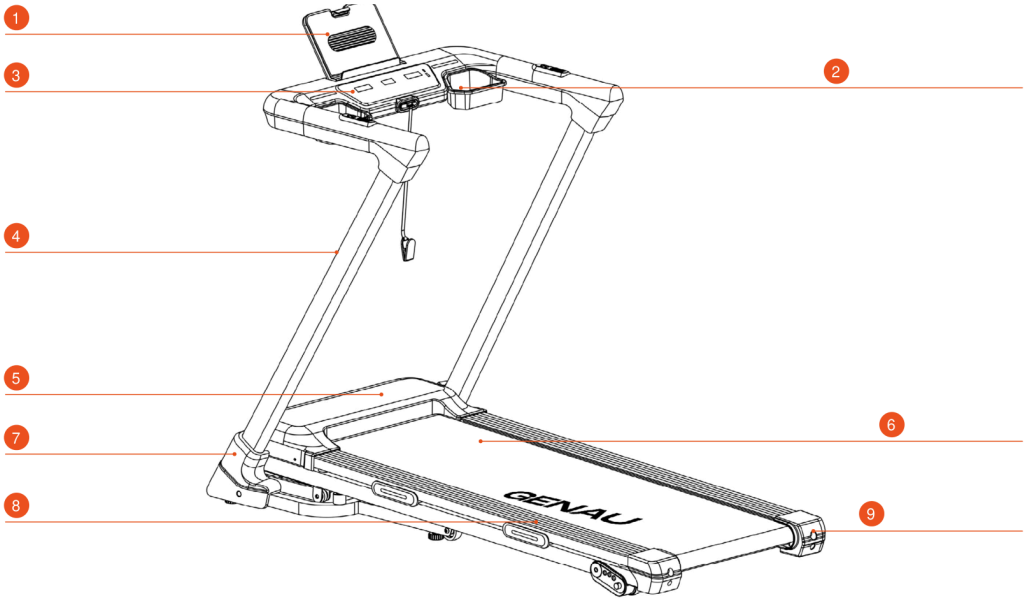

In the picture:

1. Holder
2. Bottle holder
3. Electronic console
4. Upright
5. Motor cover
6. Running belt
7. Protective cover
8. Side rail
9. End cap

Important! The safety key is red. The red device with a red cord in the plastic bag with the manual is the safety key. Insert the key into the yellow slot on the electronic console. Pulling out the safety key while the treadmill is running will cause an emergency stop.

Accessory Bag Contents

No.	Item	Unit	Qty
1	Phillips self-tapping screw ST4×30	pcs	6
2	Hex socket cap screw M8×20	pcs	6
3	Phillips countersunk screw M8×42	pcs	2
4	Phillips self-tapping screw ST4×10	pcs	2

No.	Item	Unit	Qty
5	Hex key 5 mm	pcs	1
6	Hex key 6 mm	pcs	1
7	Power cable	pcs	1
8	Oil	bottle	1
9	User Manual	pcs	1
10	Safety key	pcs	1
11	Screw ST4×16	pcs	2

Packing List

No.	Item	Unit	Qty
1	Assembled unit	set	1
2	Holder	pcs	1
3	Upright cover	pcs	1
4	Armrest covers	set	1
5	Accessory bag	pcs	1
6	Bottle holder	pcs	2

Scale: A ruler for measuring screw length is included in the printed manual. On a phone screen, the size does not match the actual size.

ASSEMBLY

During installation, first fasten all screws loosely; final tightening is done after the frame is fully assembled.

STEP 1

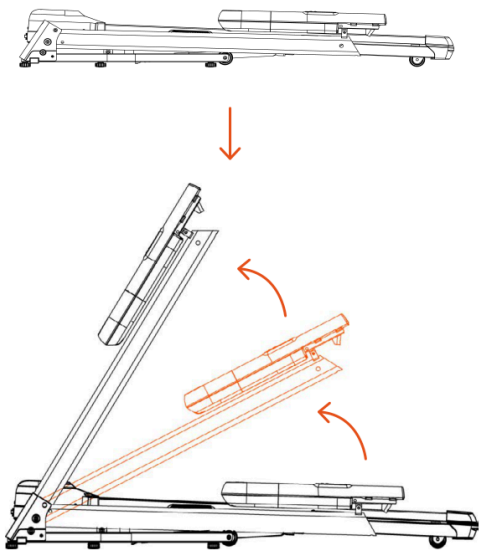

- Two or more people should carefully take the treadmill out of the box and lay it flat on the floor.
- Then cut the nylon cable ties on the left and right sides of the running belt and the base frame. One person should raise the left and right uprights, turning them counterclockwise.

STEP 2

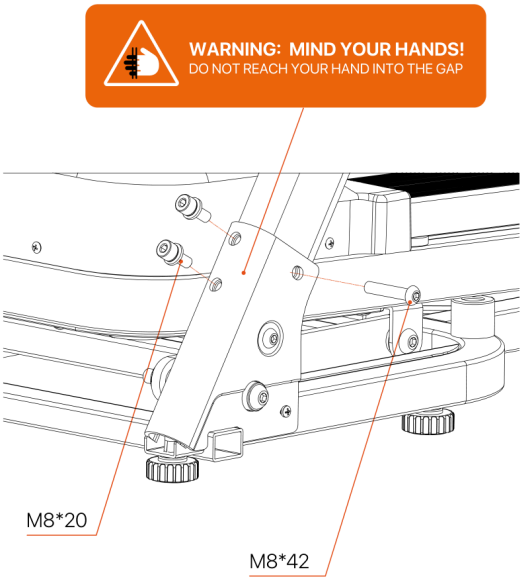

- Using the No. 5 hex key, one person fixes the upright with one M8×42 countersunk screw (do not fully tighten); then, using the No. 6 hex key, fastens two M8×20 combination button head screws into the base frame from the front side of the upright (also do not fully tighten).
- Repeat step 2 to fasten the upright on the other side.

Warning! When disassembling, installing, folding or moving the treadmill, do not put your hands or fingers into the gaps between its parts — risk of pinching!

STEP 3

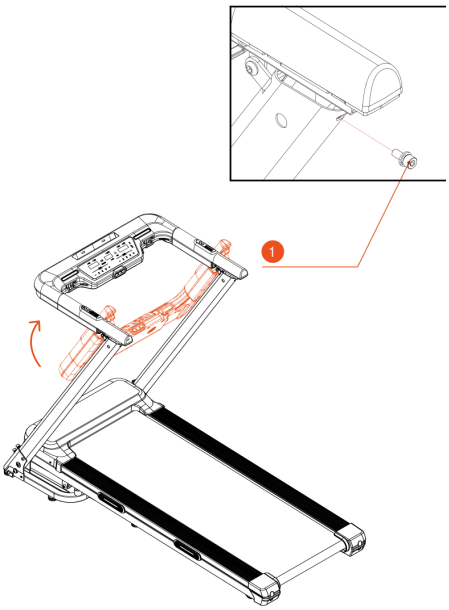

In the picture:

1. Screw M8×20

- Two people lift the instrument panel, turning it clockwise. (Note: do not let go of the treadmill during this step.)
- Use the No. 6 hex key to fasten one M8×20 button head screw on the rear side of the panel.
- Repeat step 3 to fasten the panel on the other side. Once the screws are installed, use the No. 6 and No. 5 hex keys to fully tighten and secure the screws installed in steps 2 and 3, one by one.

Note: When tightening the screws, do not pinch the cables in the right upright.

STEP 4

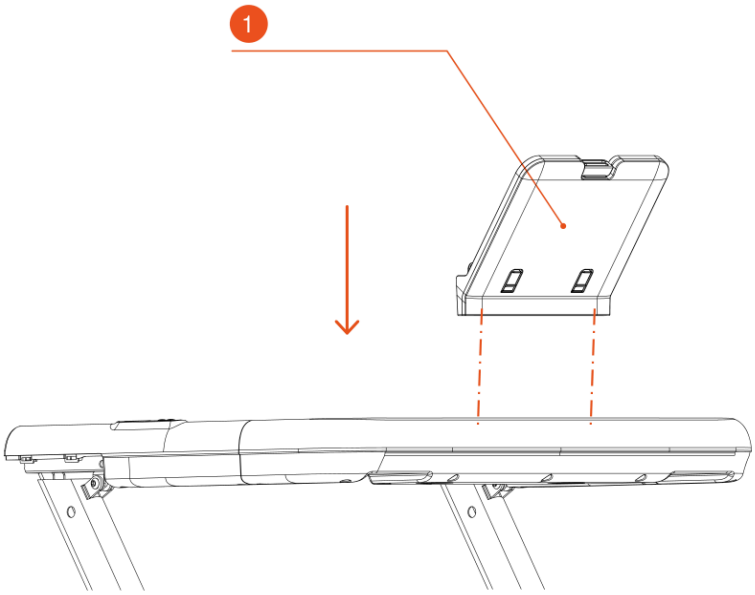

In the picture:

1. Holder

- Performed by one person: take the holder out of the foam. Then insert the holder into the instrument panel in the direction shown by the arrow in the figure.

Note: After installation, pull the holder in the opposite direction to make sure it is securely locked.

STEP 5

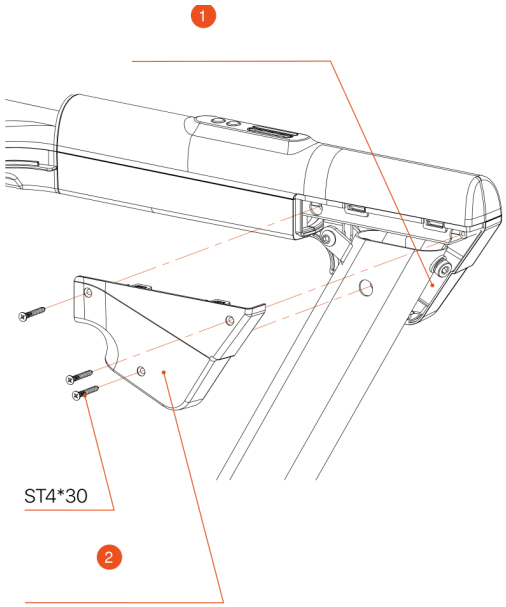

In the picture:

1. Outer armrest cover
2. Inner armrest cover

- Performed by one person. (Before step 5, make sure all screws from the previous steps are tightened and secured.)
- First take the outer rear armrest cover and snap it into the gap between the upright and the instrument panel.
- Then take the inner rear armrest cover and, using a Phillips screwdriver, fully tighten and fix the inner cover to the outer cover with the ST4×30 countersunk self-tapping screws.
- Repeat the same steps to install the armrest covers on the other side.

Note: When installing the covers, take care not to pinch the communication wires.

STEP 6

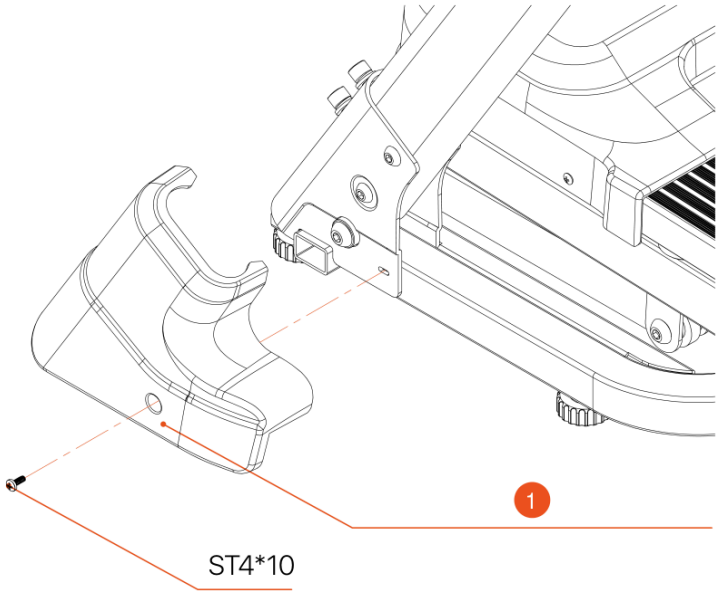

In the picture:

1. Upright decorative cover

- Performed by one person. (Before step 6, make sure all screws from the previous steps are fully tightened and secured.)
- Take a Phillips screwdriver, then take the 2 pan head self-tapping screws ST4×10 out of the blister pack.
- Attach the left and right upright decorative covers, then tighten the 2 ST4×10 self-tapping screws taken out earlier, one on each side.

STEP 7

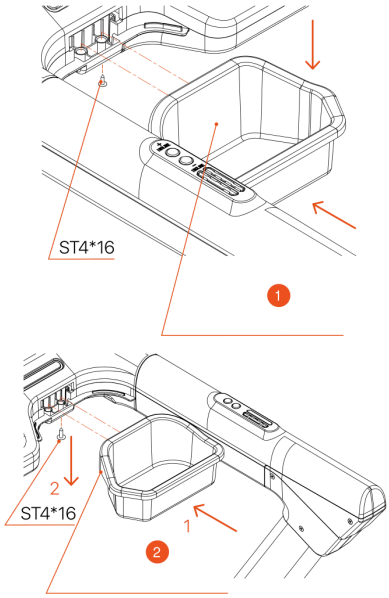

In the picture:

1. Left bottle holder
2. Right bottle holder

- Performed by one person.
- Take the left and right bottle holders out of the accessory kit.
- Insert the bottle holders into the openings on the console in the direction shown by arrow 1 in the figure.
- Then press down in the direction of arrow 2 and turn the ST4×16 screw to fix it in place.

Note: The bottle holders are left- and right-handed — pay attention during installation!

STEP 8

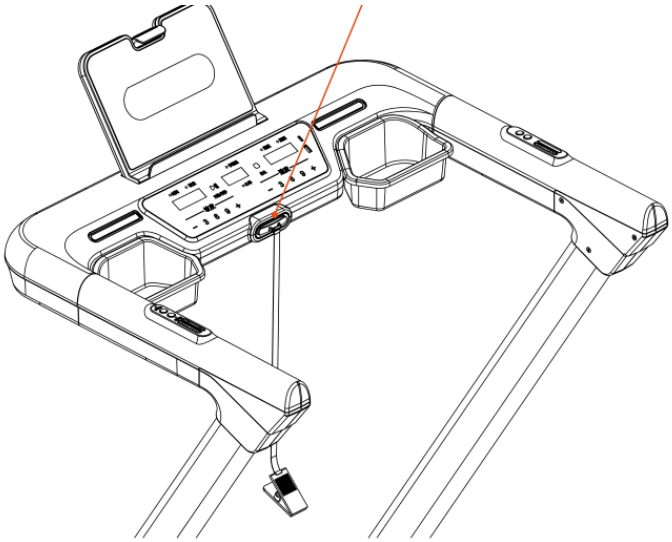

- Place the safety key in the position shown in the figure below, plug the power cable into the outlet and turn on the power switch on the front of the motor unit (the power indicator will light up).
- The indicator on the electronic console will then light up, and the treadmill can be used only after pressing the “START” button.
- If “E7” appears on the display, the key is not inserted or is inserted incorrectly.

Attention! The safety key is red and is located in the plastic bag with the manual. The red device with contacts and a red cord is the safety key. Insert the safety key into the yellow slot on the instrument panel. Pulling out the safety key while the treadmill is running will cause an immediate emergency stop!

Note: The safety key must be inserted into the yellow slot in the center under the instrument panel for the treadmill to work.

Note: Make sure all parts have been installed in accordance with the requirements above. Then tighten all screws evenly. Connect the power only after checking and confirming that nothing has been missed.

Removing the Bracket

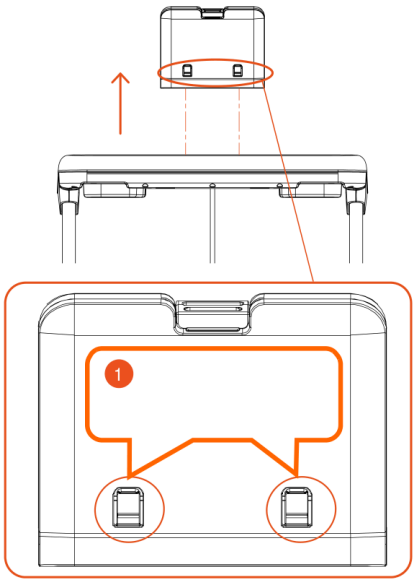

In the picture:

1. Press with both hands at the same time

Performed by one person.

- Press the circled points in the figure with both hands at the same time, then pull in the direction of the arrows in the figure — this will release the bracket.

OPERATING INSTRUCTIONS

Using the Treadmill

Insert the power plug to connect the unit to the mains, then turn on the switch (the red switch) — it will light up. You will hear a “beep”, after which the screen will light up.

On systems with a color screen, wait a moment for the start menu to load.

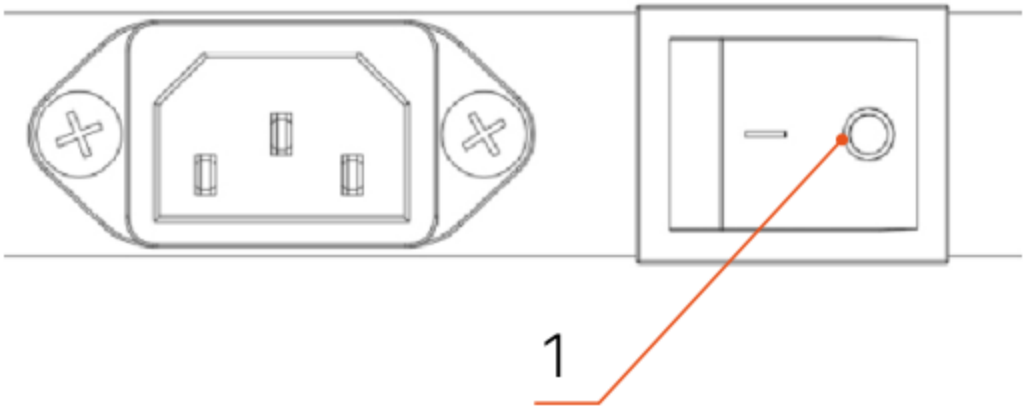

Safety key

The treadmill can only operate when the safety key is fully inserted into the yellow slot on the control panel.

- Attach the safety key clip to your clothing — in an emergency, simply pull out the key and the motor will stop instantly.
- To continue using the treadmill, insert the key back.
- In any situation, removing the safety key will stop the treadmill.

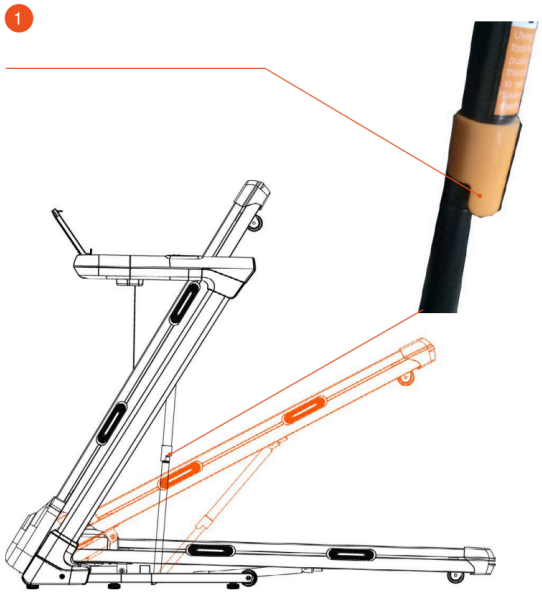

In the picture:

1. Press here to lower the running deck

Folding the Treadmill

- Folding saves space. Before folding, make sure the incline is set to “0”. Switch off the power and unplug the treadmill. Lift the running deck until it clicks into place.

Unfolding the Treadmill

- Press the gas strut with your foot, pull the deck with your hand and let go — the deck will lower to the floor automatically and slowly.

CONTROL PANEL

Safety key function

- When the safety key is removed, “E7” immediately appears on the screen, the treadmill stops and a beep sounds. After the key is inserted again, all data on the electronic console will be reset.

- In any situation, removing the safety key causes an emergency stop of the treadmill and a warning message on the screen. After the key is inserted, the system resets and returns to the main menu.

Button Functions

Symbol	Item	Description
∧ / ∨	Speed “+” / “-”	Increase or decrease the speed.
3 / 6 / 9	Speed quick keys	3, 6 or 9 km/h buttons for instant speed change.

Display

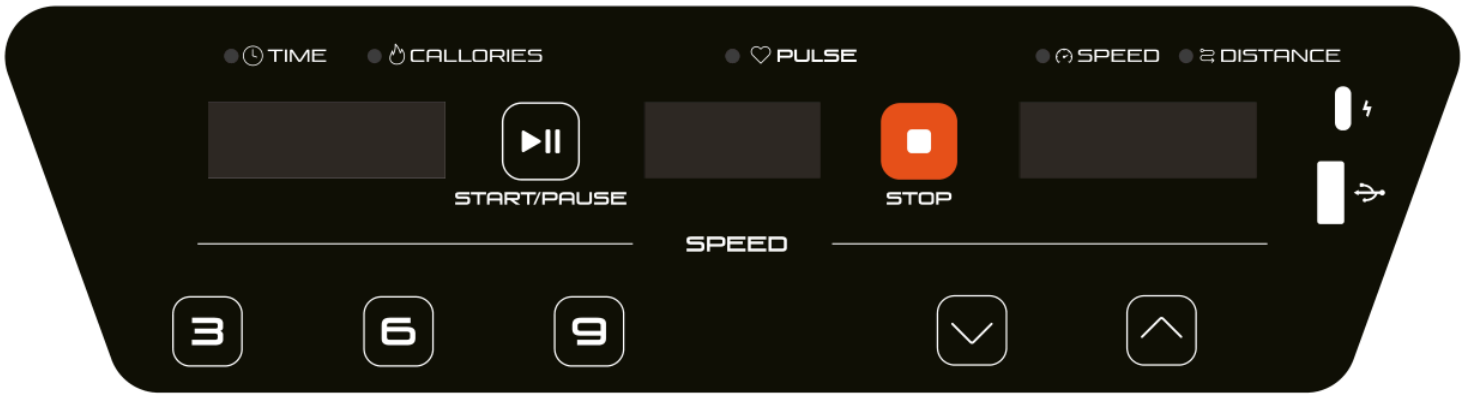

Symbol	Item	Description
TIME	Time	Shows the workout time or countdown.
CALLORIES	Calories	Shows the calories burned.
SPEED	Speed	Shows the current speed.
DISTANCE	Distance	Shows the distance covered.
PULSE	Pulse	Shows the heart rate when you touch the sensors.

These data are for reference only and are not medical data.

Note: If you cannot connect to the Bluetooth speaker or the app, make sure no USB flash drive is inserted in the port. If one is inserted, remove it and try again.

ERROR CODES AND TROUBLESHOOTING

Error code	Problem description	Possible cause and solution
E1	Communication error: when the power is turned on, the connection between the lower controller and the console is lost.	Check the cable between the console and the controller. Make sure every connector is fully plugged in. If the cable is damaged, replace it.
E2	No signal from the motor.	Check that the motor cable is connected correctly. If not, reconnect it. Check the cable for damage or a burning smell. If present, replace the motor.
E5	Overcurrent protection: during operation, the controller detects a current above 6 A for more than 3 seconds.	An overload may trigger the protection or stop the motor because of jamming. Restart the treadmill. Check the motor for liquid or a burning smell — if present, replace the motor. If the controller has burned out, replace it. Check the supply voltage. If it is out of range, connect the correct voltage and test again.
E6	Surge protection: abnormal voltage or a fault in the motor power circuit.	Check whether the voltage is too low (less than 50% of nominal). Use the correct voltage and test again. If the controller has burned out, replace it. Make sure the motor cable is connected correctly.
E7	Safety key missing.	Place the safety key in the correct position (the yellow mark on the console).

CARE, STORAGE AND MAINTENANCE

Important! To extend the service life of the treadmill, it is recommended to take a break every 2 hours of operation.

Maintenance

Regular cleaning

Turn off the power before cleaning and use a minimal amount of water and soapy solution to prevent moisture from getting onto electrical parts.

Clean the running belt and other parts of the treadmill regularly. After each workout, wipe down the entire treadmill, including the console, with a mild soapy solution, then dry it thoroughly with a dry cloth. Simple care will keep the equipment looking great for many years. Do not use abrasive or rough brushes and

cloths, as they may damage the surface of the equipment. Do not let cleaning agents or liquids get onto the surface of the equipment. Do not use harsh chemicals or solvents to clean the treadmill.

Note: This model is made of durable materials. The plastic parts are made of strong, chemically resistant ABS, the frame is made of high-strength steel with an industrial powder coating to protect against corrosion, and the metal parts have an anti-corrosion coating. However, keep in mind that sweat left on the surface of the treadmill can be highly aggressive to the materials if not removed promptly.

Lubricating the running belt

Use only lubricants recommended by the manufacturer, such as silicone treadmill lubricant. Other types and compositions of lubricants may damage the equipment.

Lubrication frequency

- Light use (less than 3 hours per week): lubricate once every 10 months.
- Heavy use (more than 7 hours per week): lubricate every 2–5 months.

Lubrication procedure

Lift the running belt, locate the caps and spread the lubricant evenly along the entire length of the belt.

After applying the lubricant, run the treadmill at 4–5 km/h and walk on it for a few minutes so that the lubricant spreads evenly over the deck.

Avoid over-lubrication

Do not apply too much lubricant, as this can make the belt too slippery and dangerous. Remove excess lubricant with a clean towel.

Running Belt Adjustment

Check and adjust the tension and alignment of the running belt to prevent wear and ensure safe operation.

Checking belt alignment

Make sure the treadmill is placed on a level surface. Run the belt at 3–8 km/h and watch how it moves. If the belt drifts to the left or right, use the adjustment bolts to correct its position.

In the picture:

1. Belt drifting to the left
2. Belt drifting to the right

Belt drifting to the left

- Turn the left adjustment bolt 1/2 turn clockwise.
- Then turn the right adjustment bolt 1/2 turn counterclockwise.
- Check the belt position after 1–2 minutes. If the belt has not returned to the center, repeat the procedure.

Belt drifting to the right

- Turn the right adjustment bolt 1/2 turn clockwise.
- Then turn the left adjustment bolt 1/2 turn counterclockwise.
- Check the belt position after 1–2 minutes. Repeat the adjustment if necessary.

Adjusting belt tension

- If the belt is too loose, it may slip during operation. To check the tension, run the treadmill at 1 km/h and press lightly on the belt with your foot.
- If the belt stops while the motor and rollers keep running, the tension is too loose and must be tightened.
- Turn the adjustment bolts at both ends of the belt 1/2 turn clockwise. Make sure you turn both bolts the same number of times for even tension.

- Check the tension again and make sure the belt does not slip but is not overtightened.

Avoid overtightening

- Do not overtighten the running belt, as this puts excessive pressure on the front and rear roller bearings, causing squeaking and accelerated wear.
- With correct tension, you can slightly lift the edges of the belt by 50–70 mm on both sides.

Storing the Treadmill

Recommended storage and operating conditions

- Temperature: +10...+35 °C.
- Humidity: 50–75%.
- Acclimatization: if the treadmill has been stored at low temperature or high humidity (there are signs of condensation), keep it under normal conditions for at least 2–4 hours before use. Only then may you start using the treadmill.

WORKOUT TIPS AND RECOMMENDATIONS

Warm-up and Cool-down

A successful exercise program consists of three parts: warm-up, cardio training and cool-down.

The warm-up is a very important part of a workout. It should be done before every workout. Warming up helps warm the body, stretch the muscles and allow the body to adapt to more intense exercise. Repeating the warm-up at the end of the exercise can help relieve muscle soreness.

We suggest doing the appropriate warm-up and cool-down exercises according to the following scheme:

Head rolls

First tilt your head toward your right shoulder, stretch your neck and rotate your head once clockwise and once counterclockwise; then tilt your head toward your left shoulder and make one counterclockwise rotation. Repeat.

Shoulder lifts

Raise your left shoulder and make 5 backward rotations; then raise your right shoulder and make 5 backward rotations, alternating sides.

Side stretch

Raise your arms above your head, then grasp your right wrist with your left hand and reach upward until you feel your right arm fully stretched. Hold for 5 seconds before switching to the other arm.

Quadriceps stretch

Holding onto a wall with your right hand for balance, pull your left foot back with your left hand, bringing the heel as close to your buttock as possible. Hold for 15 seconds, then repeat with the other leg.

Inner thigh stretch

Sitting on the floor, put the soles of your feet together, clasp them with both hands and pull them in as close to your body as possible. Slowly press down on both heels and hold this position for 15 seconds.

Toe touch

Slowly bend forward, relax your back and shoulders and reach for your toes. Bend as low as you can and hold the position for up to 15 seconds.

Hamstring stretch

Sit down, straighten your right leg and bend your left leg. Hold your left ankle with your left hand and pull it inward so that your left foot is as close to your body as possible, with the sole against the inner side of your right thigh. Then lean your body forward and reach both hands toward your toes — the deeper the stretch, the better. Hold this position for 15 seconds, then switch legs.

Calf stretch

Lean against a wall with both hands, tilt your body at a 45-degree angle to the floor and alternately move your left and right legs back, as if walking.

WARRANTY

The translation of this section has not been reviewed yet. The official text is in Russian.

Genau guarantees the high quality and reliability of its products. We strive to offer only the best, which is why all of our equipment comes with a warranty.

Attention! Find the official A4 warranty card in the box and keep it for the entire period of use of the equipment.

Note: If you did not find the warranty card in the box, please contact the service center.

Warranty Terms

1. The warranty period starts from the date of sale.
2. The warranty covers defects caused by manufacturing faults or defective materials.
3. Warranty service is carried out at authorized service centers.
4. If the product breaks down during the warranty period, the customer must bring this warranty card and the complete product to a service center for diagnostics and repair.
5. If the warranty claim is confirmed, the product will be repaired or replaced free of charge.
6. The warranty does not cover the following cases:

- mechanical damage caused by improper use or transportation;
- damage caused by liquids, fire, chemicals or other external factors;
- failures caused by not following the operating instructions;

- modifications to the design or repairs carried out by unauthorized persons without the approval of the Service;
- consumables and components with a limited service life (belts, batteries, etc.).

Warranty claims

To receive warranty service, the customer should contact the seller (the place where the equipment was purchased).

Full Genau warranty card

SPECIFICATIONS

Parameter	Value
Input voltage	220–240 V~
Rated frequency	50–60 Hz
Motor power	3.0 HP
Speed	1.0–14 km/h
Running belt size	450×1200 mm
Maximum user weight	130 kg
Unfolded dimensions	1480×730×1210 mm
Function	Running

Manufacturer: Zhejiang Lijiujia Sports Equipment Co., Ltd. ADD: No.88 Yuegui South Road, Xicheng Street, Yongkang, Zhejiang, China.

SERVICE

For questions about assembly, operation and warranty, please contact Genau service in Kyrgyzstan.

Genau GmbH LLC (ОсОО «Генау ГМБХ»), Kyrgyzstan. Phone: +996 778 639 000

Official website genau.kg