Genau S50 Studio Electric Treadmill

User Manual

This translation was made automatically.

THANK YOU FOR YOUR PURCHASE!

Thank you for purchasing the Genau S50 Studio treadmill. Please use the equipment correctly to ensure your safety and health. Read the information below carefully before use.

Please read this manual before assembling and using the treadmill.

As part of our commitment to continuous improvement, the product may be updated when necessary without prior notice. If this manual does not match the product, the actual product takes precedence.

SAFETY INSTRUCTIONS

The translation of this section has not been reviewed yet. The official text is in Russian.

Attention! Read the user manual before using the equipment. Keep this manual for the entire service life of the equipment.

Warning!

Before starting any fitness program, you should have a medical examination, especially if you:

- have high blood pressure, high cholesterol, diabetes, chronic respiratory disease or heart disease;
- have a family history of any of the above conditions;
- are pregnant;
- are over 35 years old;
- smoke and/or are obese;
- have not exercised regularly in the past year;
- have other chronic diseases or physical impairments, or are taking any medication.

If you experience dizziness, chest pain, nausea or any other abnormal symptoms while using the treadmill, stop exercising immediately. Consult a doctor before continuing.

Intended Use

- This model can be used for running or walking.
- Suitable for home use.

Note: Using the equipment for commercial or medical purposes is prohibited. All fitness equipment is intended for home use only and must not be used in commercial or public areas.

General Precautions

Indoor use only

The treadmill is suitable only for dry and clean rooms. Keep it away from moisture, dust and direct sunlight. Do not place the equipment near sources of heat or water, such as in a bathroom or kitchen.

Electrical safety

- Use only grounded outlets and do not share the outlet with other appliances.
- A damaged power cord must be replaced by a qualified professional.
- Unplug the treadmill when it is not in use.
- Do not touch the plug or wires with wet hands.
- In case of overheating or overload, the system shuts down automatically. Check the mains voltage and replace faulty parts if problems are found.

Use by children

- Children may use the equipment only under adult supervision.
- The equipment is not a toy.
- Children must not be near the treadmill without adult supervision.

Use by persons with disabilities or limited capacity

Persons with disabilities or limited capacity must be supervised by a doctor or a caregiver.

Clothing and footwear

Wear sportswear and athletic shoes. Avoid loose or baggy clothing that could get caught in the mechanisms and moving parts of the treadmill.

Installation site requirements

The owner is responsible for taking into account the space requirements around the treadmill during operation, voluntary and industry standards, fire safety regulations and other requirements of national legislation. Recommended minimum clearance around the equipment according to EU rules (since March 1, 2017): for access and passage, at least 0.5 m to the left, right and in front of the treadmill, and 2 m behind it.

Assembly requirements

Follow the assembly instructions and assemble the treadmill only on a level surface. Do not plug the treadmill in until assembly is complete. Make sure all assembly parts are present according to the parts list. If you have any difficulties with assembly, contact the seller.

Maximum user weight

Observe the maximum user weight stated in the specifications.

Prohibited actions

- Do not jump on the treadmill, rock it or run barefoot.
- Do not use the treadmill if assembly has not been fully completed or if internal mechanisms are exposed.
- Do not use the treadmill if it is defective or damaged.
- Do not use the treadmill if you feel unwell.
- Only one person may use the treadmill at a time.
- Do not use the treadmill under the influence of alcohol or drugs.
- Keep other people, pets and children away from moving parts during use — this may cause injury.

Operation and Safety

Warm-up

Always warm up your muscles before exercising.

Equipment inspection

Before each use, inspect the treadmill for wear of parts and moving components. Make sure the treadmill is fully functional and safe.

Running belt

To avoid injury, take special care when stepping onto or off the running belt.

Starting a workout and starting the belt

Stand on the side rails, press "Start" and wait until the belt starts moving at low speed. Then carefully step onto the belt. This reduces the load on the motor at startup.

Safety key

Always clip the safety key to your clothing. It will stop the treadmill in an emergency. Keep the key away from children.

Health monitoring

If you feel dizzy, have chest pain or feel unwell in any other way, stop exercising immediately and see a doctor. People over 35 or with chronic diseases are advised to consult a doctor before starting to exercise.

Disposal

The electronic components in this equipment are considered hazardous to the environment. Please dispose of them properly in accordance with national legislation.

Note: Please keep in mind that heart rate accuracy depends on a number of factors, including the user's physiology and age, how the equipment and the heart rate measurement system are used, external interference and other factors that may affect the accuracy of the collected and processed heart rate data. Therefore, non-medical equipment cannot guarantee accurate heart rate measurements.

PRODUCT COMPONENTS

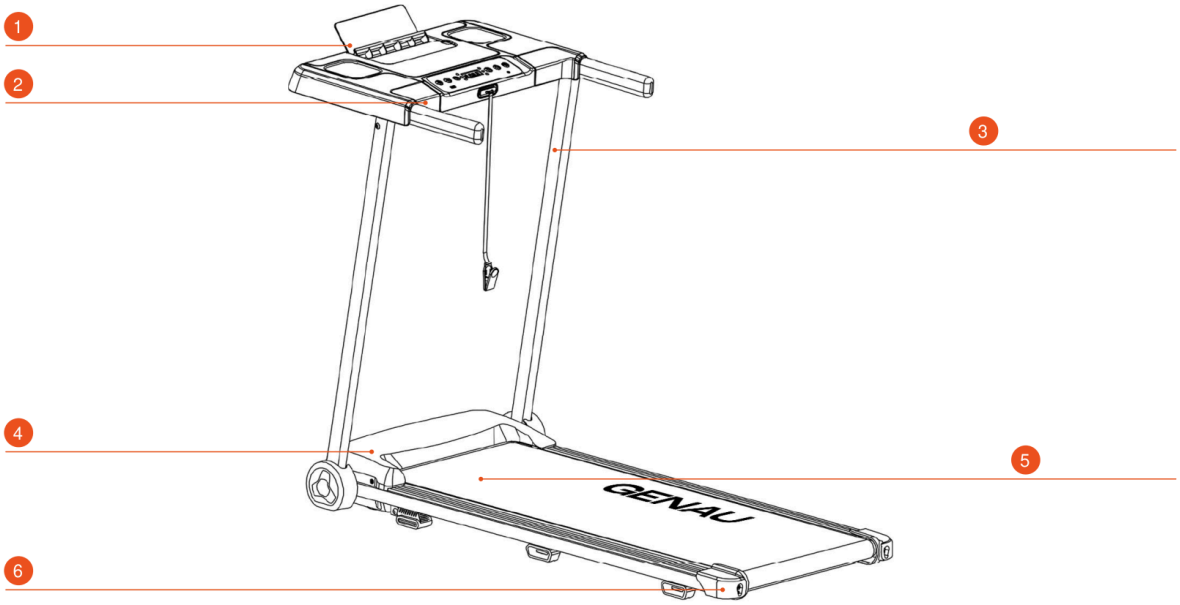

In the picture:

1. Tablet holder
2. Console
3. Upright
4. Motor compartment cover
5. Running belt
6. End cap

Note: The safety key is red. Inside the PE bag with the screws and installation tools there is a device with a magnet and a red cord — this is the key. Please place the magnetic end on the yellow sticker on the console.

Packing List

No.	Item	Unit	Qty
1	Treadmill, assembled	set	1
2	Side cover	set	1
3	Accessory bag	pcs	1

Accessory Bag Contents

No.	Item	Unit	Qty
1	Screws M8×18	pcs	2

No.	Item	Unit	Qty
2	Hex key 5 mm	pcs	1
3	Hex key 6 mm	pcs	1
4	Safety key	pcs	1
5	Silicone lubricant	pcs	1
6	User manual	pcs	1

Scale: A ruler for measuring screw length is included in the printed manual. On a phone screen, the size does not match the actual size.

ASSEMBLY

During assembly, first fit all screws without tightening them. Tighten the screws fully once the frame is completely assembled.

STEP 1

In the picture:

1. Fig. 1
2. Fig. 2
3. Knob

Carefully take the treadmill out of the box and lay it flat on the floor.

Note: When disassembling, installing, folding and moving the treadmill, do not put your hands or fingers into gaps in the structure — there is a risk of pinching!

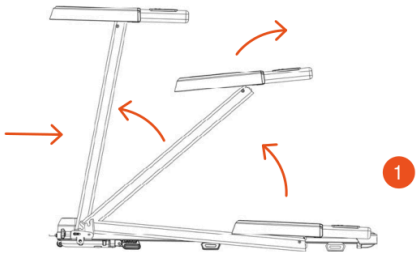

In the picture:

1. Fig. 3
2. Fig. 4
3. Knob

Attention! The protective element installed on the front of the treadmill and attached to the edge of the knob is packaging material, not a component.

- As shown in Fig. 2, turn the knob counterclockwise to release it.
- As shown in Fig. 3, the left and right uprights are raised counterclockwise, then the console is raised clockwise.
- As shown in Fig. 4, turn the knob clockwise as shown in the figure.

STEP 2

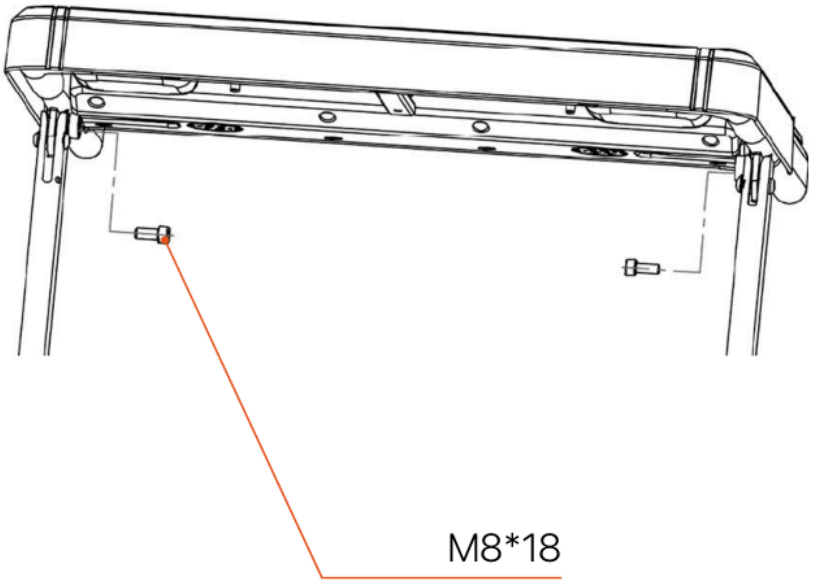

- Use the No. 6 hex key to tighten the two M8×18 cylinder-head screws, fastening the console frame to the uprights.
- Please hold the uprights on both sides with your hands.
- (When tightening the screws, make sure the frame does not pinch the wire in the right upright.)

STEP 3

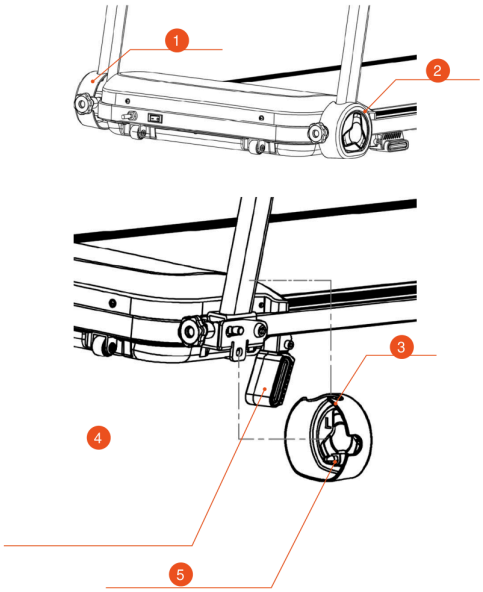

In the picture:

1. Right cover
2. Left cover
3. Hole
4. It is recommended to set both feet to the upper position when fitting the protective cover — this gives more working space and makes installation easier.
5. Locking latch

Insert the upper part of the cover into the column, then align the cover's locking latch with one of the holes on the metal frame. Press the cover firmly until it locks into place.

Note: The covers come as left and right. After installing the treadmill, adjust the supports in the center and rear of the base if necessary to compensate for uneven floors. Make sure all supports are in contact with the floor.

STEP 4

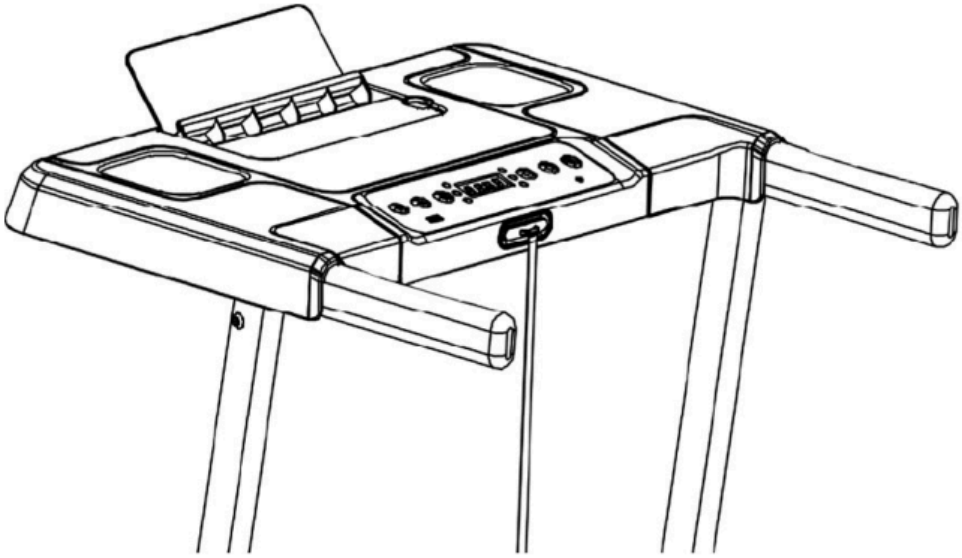

- Place the safety key in the position shown in the next figure.
- Plug the power cord into the outlet and press the power button on the front of the motor cover (the indicator lights up when the power is on).
- When the indicator on the console lights up, press the Start button and the treadmill will start running!

Note: The safety key is red. Inside the plastic bag containing the instructions there is a device with a red cord — this is the safety key. Insert it into the yellow slot on the control panel. If the key is pulled out while the running belt is moving, the belt will stop immediately.

Note: The safety key must be placed on the yellow mark in the center of the panel, otherwise the treadmill will not start. If the error "E7" appears on the display, the safety key is not in place or is placed incorrectly.

Note: Make sure the installation has been carried out in full compliance with the above requirements. Tighten all screws firmly and check that nothing has been missed before turning on the power.

Two-level running deck incline adjustment

First set the front of the treadmill to the upper position by lowering the incline adjusters. This provides the required running deck incline on both sides.

Then adjust the levelers located in the center and rear of the base so that all supports are in firm contact with the floor. If the feet do not touch the surface, this may cause vibration, extraneous noise and, in some

cases, damage to the treadmill or injury.

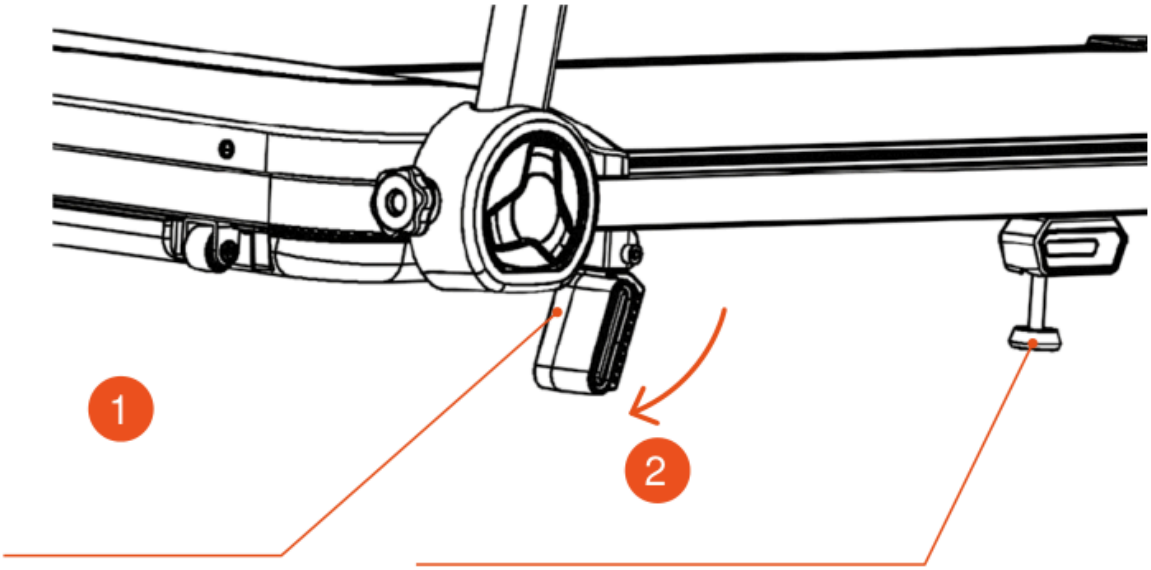

In the picture:

1. Incline adjustment foot
2. Adjustable support — floor leveler

Note: If the treadmill is placed on a hard surface, it can be used without adjustment. If it stands on a soft covering (such as carpet), the front of the frame must be raised to avoid friction against the soft material, which could damage the treadmill.

SETUP AND OPERATION

Using the Treadmill

- Plug the power cord into the outlet and turn on the power with the toggle switch (the red switch on the front of the motor cover).
- The indicator lights up, a beep sounds and the display turns on.

Safety Key

- The treadmill can only run when the safety key is in place — it must be on the yellow mark of the control panel.
- Clip the safety key to your clothing for protection.
- In an emergency, remove the safety key immediately — this will stop the motor instantly.
- If you want to continue your workout, put the key back.
- In any case, removing the safety key will stop the treadmill immediately.

CONTROL PANEL

Safety Key Function

- When the safety key is removed, the error "E7" appears on the display, the treadmill stops immediately and an alarm sounds.
- After the key is put back, all data on the display is reset to zero.
- In any mode, removing the safety key stops the treadmill instantly.
- A message appears on the display, and the system returns to the start screen after the key is put back.

Button Functions

Symbol	Name	Description
P	Program	In standby mode, switches between manual mode and preset programs. Manual mode is the default.
M	Mode	In standby mode, switches between three countdown options.
+	Speed +	Increases the speed while the treadmill is running.
-	Speed -	Decreases the speed while the treadmill is running.
3/6/9	Speed quick key	Lets you quickly switch between speeds of 3 / 6 / 9 km/h.

Display Functions

Function	Description
Speed	Shows the current speed.
Time	Shows the total workout time in manual mode or the countdown in preset programs.
Distance	Shows the distance covered in manual and program modes, or the distance countdown in target mode.

Function	Description
Calories	Shows the calories burned during the workout or the calories remaining until the end of the program.
Heart rate display	When there is a signal from the pulse sensor, the heart rate is shown on the display and the pulse indicator lights up.

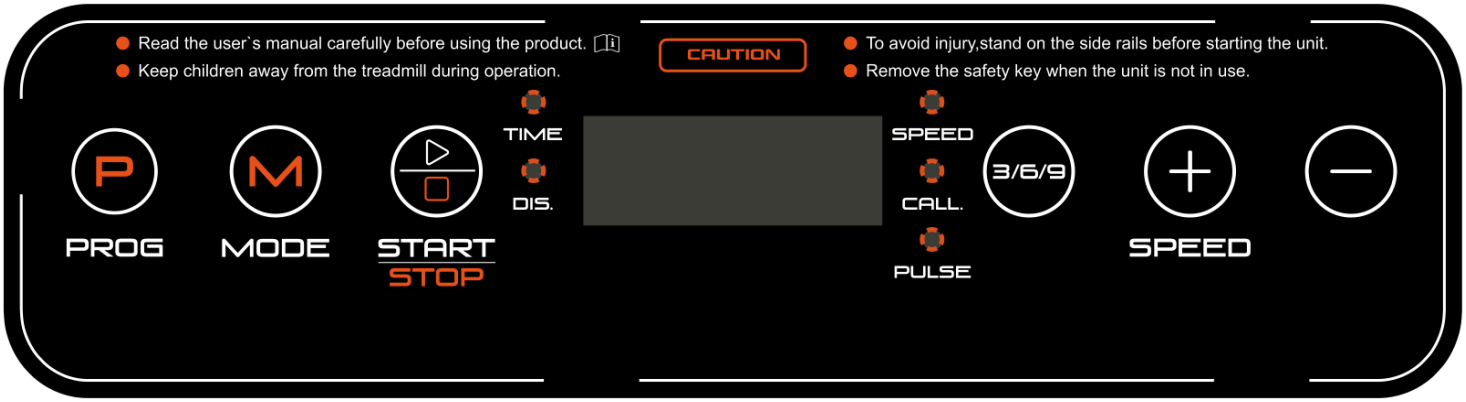

Heart rate measurement:

After turning on the treadmill, place your hands on the pulse sensors — your heart rate will be displayed after a few seconds.

Note: The readings are intended for general guidance only and cannot be used for medical purposes.

PRESET PROGRAMS

The duration of one workout segment is calculated as the total set time divided by 10.

Program / Segment	1	2	3	4	5	6	7	8	9	10
P1 · Speed	3	3	6	5	5	4	4	4	4	3
P2 · Speed	3	3	4	4	5	5	5	6	6	4
P3 · Speed	2	4	6	8	7	8	6	2	3	2
P4 · Speed	3	3	5	6	7	6	5	4	3	3
P5 · Speed	3	6	6	6	8	7	7	5	5	4
P6 · Speed	2	6	5	4	8	7	5	3	3	2
P7 · Speed	2	9	9	7	7	6	5	3	2	2

Program / Segment	1	2	3	4	5	6	7	8	9	10
P8 · Speed	2	4	4	4	5	6	8	8	6	2
P9 · Speed	2	4	5	5	6	5	6	3	3	2
P10 · Speed	2	5	7	5	8	6	5	2	4	3
P11 · Speed	2	5	6	7	8	9	10	5	3	2
P12 · Speed	2	3	5	6	8	6	9	6	5	3

Body Fat Measurement

In standby mode, press the "Program" button to go to the body mass index (BMI) test. A test icon appears on the display, and the speed window shows the parameters (Gender: 001 — Male, 002 — Female; Age — 025; Height — 170; Weight — 070; Fat test — "---").

Press the "Mode" button to go to the next step. Use the speed control knob to change the values.

When you enter the body fat test screen, the speed window shows "---" and you can start the test.

FAT	Category	Settings or test data
F-1	Gender	001 — Male / 002 — Female
F-2	Age	10–99 (25)
F-3	Height	100–200 (170)
F-4	Weight	20–150 (70)
F-5	Body fat	<19 Underweight / 19–25 Normal / 25–29 Overweight / >29 Obese

Test steps:

Hold the metal heart rate sensors with both hands for about 3 seconds. Your body fat percentage will then appear on the display. Check that the weight and height values are correct.

Note: BMI reflects the ratio of a person's height to weight, not the actual body fat percentage. Suitable for men and women. Ideal body fat level: 20–25%.

- Below 19% — underweight
- 25–29% — overweight
- Over 30% — obese

* These data are for reference only and are not a medical assessment.

ERROR CODES AND TROUBLESHOOTING

Error code	Problem description	Possible cause and solution
E1	Communication error: when the power is turned on, the connection between the lower controller and the console is lost.	Check the cable between the console and the controller. Make sure every connector is fully plugged in. If the cable is damaged, replace it.
E2	No signal from the motor.	Check that the motor cable is connected correctly. If not, reconnect it. Check the cable for damage or a burning smell. If present, replace the motor.
E5	Overcurrent protection: during operation, the controller detects a current above 6 A for more than 3 seconds.	An overload may trigger the protection or stop the motor because of jamming. Restart the treadmill. Check the motor for liquid or a burning smell — if present, replace the motor. If the controller has burned out, replace it. Check the supply voltage. If it is out of range, connect the correct voltage and test again.
E6	Surge protection: abnormal voltage or a fault in the motor power circuit.	Check whether the voltage is too low (less than 50% of nominal). Use the correct voltage and test again. If the controller has burned out, replace it. Make sure the motor cable is connected correctly.
E7	Safety key missing.	Place the safety key in the correct position (the yellow mark on the console).

CARE, STORAGE AND MAINTENANCE

Important! To extend the service life of the treadmill, take a ten-minute break every 1–1.5 hours of operation.

Maintenance

Regular cleaning

Turn off the power before cleaning and use a minimal amount of water and soapy solution to prevent moisture from getting onto electrical parts.

Clean the running belt and other parts of the treadmill regularly. After each workout, wipe down the entire treadmill, including the console, with a mild soapy solution, then dry it thoroughly with a dry cloth. Simple care will keep the equipment looking great for many years. Do not use abrasive or rough brushes and

cloths, as they may damage the surface of the equipment. Do not let cleaning agents or liquids get onto the surface of the equipment. Do not use harsh chemicals or solvents to clean the treadmill.

Note: This model is made of durable materials. The plastic parts are made of strong, chemically resistant ABS, the frame is made of high-strength steel with an industrial powder coating to protect against corrosion, and the metal parts have an anti-corrosion coating. However, keep in mind that sweat left on the surface of the treadmill can be highly aggressive to the materials if not removed promptly.

Lubricating the running belt

Use only lubricants recommended by the manufacturer, such as silicone treadmill lubricant. Other types and compositions of lubricants may damage the equipment.

Lubrication frequency

- Light use (less than 3 hours per week): lubricate once every 10 months.
- Heavy use (more than 7 hours per week): lubricate every 2–5 months.

Lubrication procedure

Lift the running belt and spread the lubricant evenly along the entire length of the belt.

After applying the lubricant, run the treadmill at 4–5 km/h and walk on it for a few minutes so that the lubricant spreads evenly over the deck.

Avoid over-lubrication

Do not apply too much lubricant, as this can make the belt too slippery and dangerous. Remove excess lubricant with a clean towel.

Running Belt Adjustment

Check and adjust the tension and alignment of the running belt to prevent wear and ensure safe operation.

Checking belt alignment

Make sure the treadmill is placed on a level surface. Run the belt at 3–8 km/h and watch how it moves. If the belt drifts to the left or right, use the adjustment bolts to correct its position.

In the picture:

1. Belt drifting to the left
2. Belt drifting to the right

Belt drifting to the left

- Turn the left adjustment bolt 1/2 turn clockwise.
- Then turn the right adjustment bolt 1/2 turn counterclockwise.
- Check the belt position after 1–2 minutes. If the belt has not returned to the center, repeat the procedure.

Belt drifting to the right

- Turn the right adjustment bolt 1/2 turn clockwise.
- Then turn the left adjustment bolt 1/2 turn counterclockwise.
- Check the belt position after 1–2 minutes. Repeat the adjustment if necessary.

Adjusting belt tension

- If the belt is too loose, it may slip during operation. To check the tension, run the treadmill at 1 km/h and press lightly on the belt with your foot.
- If the belt stops while the motor and rollers keep running, the tension is too loose and must be tightened.
- Turn the adjustment bolts at both ends of the belt 1/2 turn clockwise. Make sure you turn both bolts the same number of times for even tension.

- Check the tension again and make sure the belt does not slip but is not overtightened.

Avoid overtightening

- Do not overtighten the running belt, as this puts excessive pressure on the front and rear roller bearings, causing squeaking and accelerated wear.
- With correct tension, you can slightly lift the edges of the belt by 50–70 mm on both sides.

Storing the Treadmill

Recommended storage and operating conditions

- Temperature: +10...+35 °C.
- Humidity: 50–75%.
- Acclimatization: if the treadmill has been stored at low temperature or high humidity (there are signs of condensation), keep it under normal conditions for at least 2–4 hours before use. Only then may you start using the treadmill.

WORKOUT TIPS AND RECOMMENDATIONS

Warm-up and Cool-down

A successful exercise program consists of three parts: warm-up, cardio training and cool-down.

The warm-up is a very important part of a workout. It should be done before every workout. Warming up helps warm the body, stretch the muscles and allow the body to adapt to more intense exercise. Repeating the warm-up at the end of the exercise can help relieve muscle soreness.

We suggest doing the appropriate warm-up and cool-down exercises according to the following scheme:

Head rolls

First tilt your head toward your right shoulder, stretch your neck and rotate your head once clockwise and once counterclockwise; then tilt your head toward your left shoulder and make one counterclockwise rotation. Repeat.

Shoulder lifts

Raise your left shoulder and make 5 backward rotations; then raise your right shoulder and make 5 backward rotations, alternating sides.

Side stretch

Raise your arms above your head, then grasp your right wrist with your left hand and reach upward until you feel your right arm fully stretched. Hold for 5 seconds before switching to the other arm.

Quadriceps stretch

Holding onto a wall with your right hand for balance, pull your left foot back with your left hand, bringing the heel as close to your buttock as possible. Hold for 15 seconds, then repeat with the other leg.

Inner thigh stretch

Sitting on the floor, put the soles of your feet together, clasp them with both hands and pull them in as close to your body as possible. Slowly press down on both heels and hold this position for 15 seconds.

Toe touch

Slowly bend forward, relax your back and shoulders and reach for your toes. Bend as low as you can and hold the position for up to 15 seconds.

Hamstring stretch

Sit down, straighten your right leg and bend your left leg. Hold your left ankle with your left hand and pull it inward so that your left foot is as close to your body as possible, with the sole against the inner side of your right thigh. Then lean your body forward and reach both hands toward your toes — the deeper the stretch, the better. Hold this position for 15 seconds, then switch legs.

Calf stretch

Lean against a wall with both hands, tilt your body at a 45-degree angle to the floor and alternately move your left and right legs back, as if walking.

WARRANTY

The translation of this section has not been reviewed yet. The official text is in Russian.

Genau guarantees the high quality and reliability of its products. We strive to offer only the best, which is why all of our equipment comes with a warranty.

Attention! Find the official A4 warranty card in the box and keep it for the entire period of use of the equipment.

Note: If you did not find the warranty card in the box, please contact the service center.

Warranty Terms

1. The warranty period starts from the date of sale.
2. The warranty covers defects caused by manufacturing faults or defective materials.
3. Warranty service is carried out at authorized service centers.
4. If the product breaks down during the warranty period, the customer must bring this warranty card and the complete product to a service center for diagnostics and repair.
5. If the warranty claim is confirmed, the product will be repaired or replaced free of charge.
6. The warranty does not cover the following cases:

- mechanical damage caused by improper use or transportation;
- damage caused by liquids, fire, chemicals or other external factors;
- failures caused by not following the operating instructions;
- modifications to the design or repairs carried out by unauthorized persons without the approval of the Service;
- consumables and components with a limited service life (belts, batteries, etc.).

Warranty claims

To receive warranty service, the customer should contact the seller (the place where the equipment was purchased).

Full Genau warranty card

SPECIFICATIONS

Parameter	Value
Rated voltage	220–240 V~
Rated frequency	50–60 Hz
Motor power	2.0 hp
Speed	1.0–12 km/h
Running belt size	1050×410 mm
Maximum user weight	110 kg
Unfolded dimensions	1295×620×1000 mm
Functions	Running

Manufacturer: Zhejiang Lijiujia Sports Equipment Co., Ltd. No.88 Yuegui South Road, Xicheng Street, Yongkang, Zhejiang, China.

SERVICE

For questions about assembly, operation and warranty, please contact Genau service in Kyrgyzstan.

Genau GmbH LLC (ОсОО «Генау ГМБХ»), Kyrgyzstan. Phone: +996 778 639 000

Official website genau.kg