Genau TR50 Electric Treadmill

User Manual

This translation was made automatically.

THANK YOU FOR YOUR PURCHASE!

Thank you for purchasing the Genau TR50 treadmill. Please use the equipment correctly to ensure your safety and health. Read the information below carefully before use.

Please read this manual before assembling and using the treadmill.

As part of our commitment to continuous improvement, the product may be updated when necessary without prior notice. If this manual does not match the product, the actual product takes precedence.

SAFETY INSTRUCTIONS

The translation of this section has not been reviewed yet. The official text is in Russian.

Attention! Read the user manual before using the equipment. Keep this manual for the entire service life of the equipment.

Warning!

Before starting any fitness program, you should have a medical examination, especially if you:

- have high blood pressure, high cholesterol, diabetes, chronic respiratory disease or heart disease;
- have a family history of any of the above conditions;
- are pregnant;
- are over 35 years old;
- smoke and/or are obese;
- have not exercised regularly in the past year;
- have other chronic diseases or physical impairments, or are taking any medication.

If you experience dizziness, chest pain, nausea or any other abnormal symptoms while using the treadmill, stop exercising immediately. Consult a doctor before continuing.

Intended Use

- This model can be used for running or walking.
- Suitable for home use.

Note: Using the equipment for commercial or medical purposes is prohibited. All fitness equipment is intended for home use only and must not be used in commercial or public areas.

General Precautions

Indoor use only

The treadmill is suitable only for dry and clean rooms. Keep it away from moisture, dust and direct sunlight. Do not place the equipment near sources of heat or water, such as in a bathroom or kitchen.

Electrical safety

- Use only grounded outlets and do not share the outlet with other appliances.
- A damaged power cord must be replaced by a qualified professional.
- Unplug the treadmill when it is not in use.
- Do not touch the plug or wires with wet hands.
- In case of overheating or overload, the system shuts down automatically. Check the mains voltage and replace faulty parts if problems are found.

Use by children

- Children may use the equipment only under adult supervision.
- The equipment is not a toy.
- Children must not be near the treadmill without adult supervision.

Use by persons with disabilities or limited capacity

Persons with disabilities or limited capacity must be supervised by a doctor or a caregiver.

Clothing and footwear

Wear sportswear and athletic shoes. Avoid loose or baggy clothing that could get caught in the mechanisms and moving parts of the treadmill.

Installation site requirements

The owner is responsible for taking into account the space requirements around the treadmill during operation, voluntary and industry standards, fire safety regulations and other requirements of national legislation. Recommended minimum clearance around the equipment according to EU rules (since March 1, 2017): for access and passage, at least 0.5 m to the left, right and in front of the treadmill, and 2 m behind it.

Assembly requirements

Follow the assembly instructions and assemble the treadmill only on a level surface. Do not plug the treadmill in until assembly is complete. Make sure all assembly parts are present according to the parts list. If you have any difficulties with assembly, contact the seller.

Maximum user weight

Observe the maximum user weight stated in the specifications.

Prohibited actions

- Do not jump on the treadmill, rock it or run barefoot.
- Do not use the treadmill if assembly has not been fully completed or if internal mechanisms are exposed.
- Do not use the treadmill if it is defective or damaged.
- Do not use the treadmill if you feel unwell.
- Only one person may use the treadmill at a time.
- Do not use the treadmill under the influence of alcohol or drugs.
- Keep other people, pets and children away from moving parts during use — this may cause injury.

Operation and Safety

Warm-up

Always warm up your muscles before exercising.

Equipment inspection

Before each use, inspect the treadmill for wear of parts and moving components. Make sure the treadmill is fully functional and safe.

Running belt

To avoid injury, take special care when stepping onto or off the running belt.

Starting a workout and starting the belt

Stand on the side rails, press "Start" and wait until the belt starts moving at low speed. Then carefully step onto the belt. This reduces the load on the motor at startup.

Safety key

Always clip the safety key to your clothing. It will stop the treadmill in an emergency. Keep the key away from children.

Health monitoring

If you feel dizzy, have chest pain or feel unwell in any other way, stop exercising immediately and see a doctor. People over 35 or with chronic diseases are advised to consult a doctor before starting to exercise.

Disposal

The electronic components in this equipment are considered hazardous to the environment. Please dispose of them properly in accordance with national legislation.

Note: Please keep in mind that heart rate accuracy depends on a number of factors, including the user's physiology and age, how the equipment and the heart rate measurement system are used, external interference and other factors that may affect the accuracy of the collected and processed heart rate data. Therefore, non-medical equipment cannot guarantee accurate heart rate measurements.

PRODUCT COMPONENTS

In the picture:

1. Console
2. Upright
3. Motor cover
4. Running belt
5. Side rail
6. End cap

Packing List

No.	Item	Unit	Qty
1	Treadmill, assembled	pcs	1
2	Accessory bag	pcs	1
3	Side cover	pcs	1

Accessory Bag Contents

No.	Item	Qty
1	Hex key 6 mm	1
2	Hex key 5 mm	1
3	Combination wrench	1
4	Safety key	1

No.	Item	Qty
5	Silicone lubricant	1
6	User manual	1
7	MP3 cable	1
8	Screw M8×22	4
9	Screw M8×45	2
10	Nut M8	2
11	Screw M8×25	2

Scale: A ruler for measuring screw length is included in the printed manual. On a phone screen, the size does not match the actual size.

ASSEMBLY

STEP 1

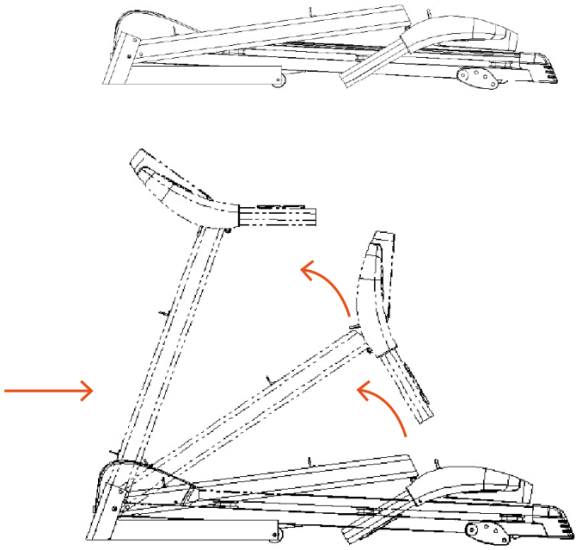

Place the treadmill flat on the floor. Raise the uprights and the console as shown in the figure.

STEP 2

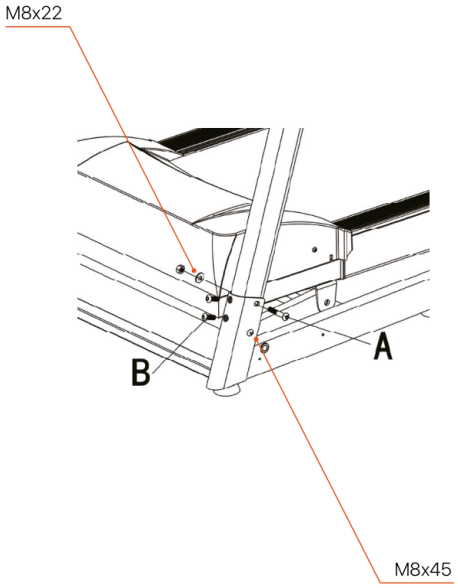

Using the 5 mm hex key, secure the uprights to the base by inserting the M8×45 (A) and M8×22 (B) bolts through the holes in the base and the uprights. Tighten with the M8 nuts.

STEP 3

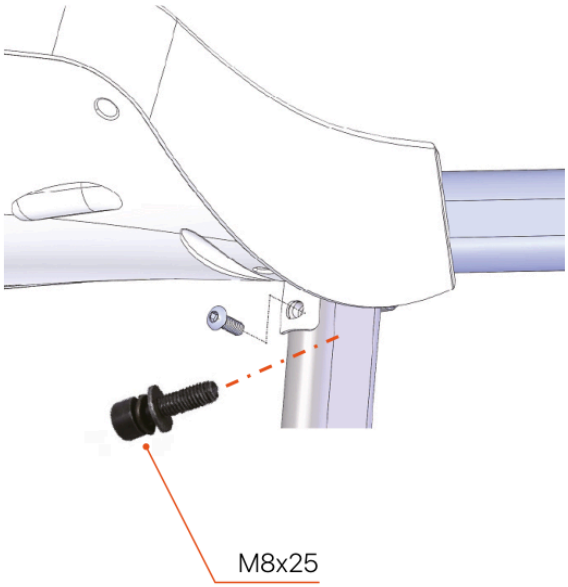

Holding the left and right uprights, use the 6 mm hex key to secure the console frame to the uprights with M8×25 bolts.

STEP 4

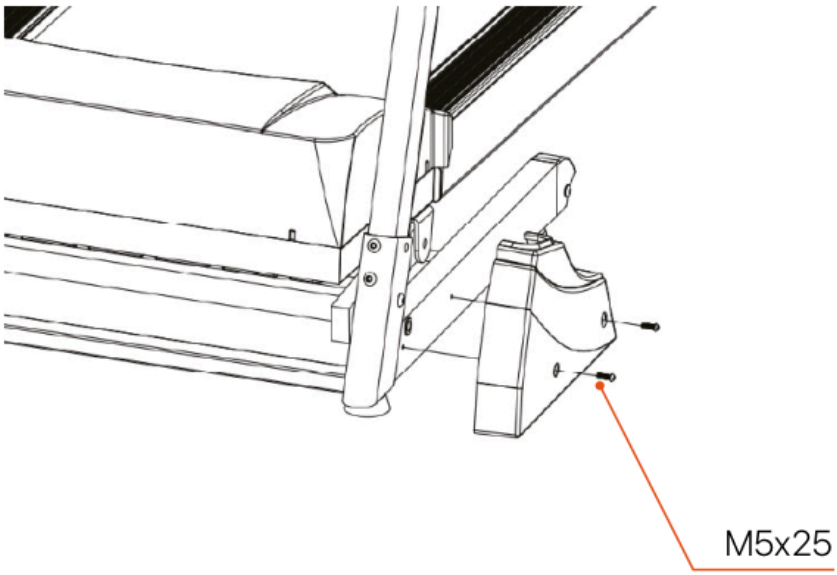

Using a screwdriver, remove the pre-installed M5×14 screws and use them to attach the side covers to the base.

Installing the Safety Key

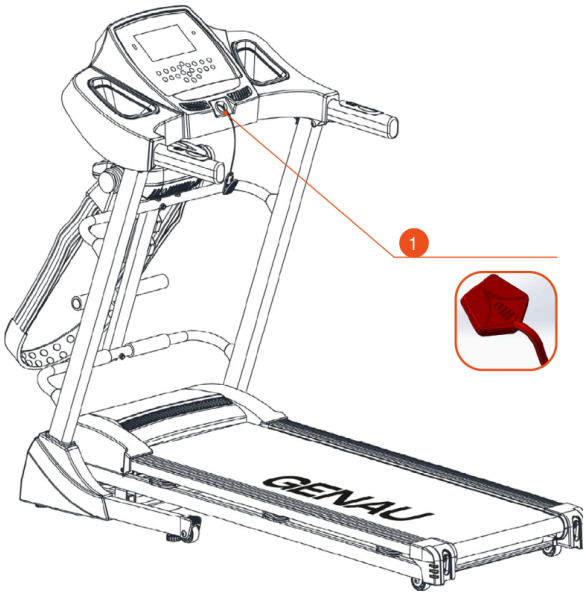

In the picture:

1. Safety key

Place the safety key in the indicated position as shown in the figure.

Note: After installation, make sure all screws are evenly and securely tightened as required. Check that all parts are in place before connecting the power.

SETUP AND OPERATION

Using the Treadmill

- Plug in the power cord and turn on the power switch (red).
- When the indicator lights up, a beep will sound and the display will turn on.

Safety Key

- Keep the safety key out of the reach of children when the treadmill is not in use. Store the silicone lubricant where children cannot reach it. If swallowed or if it gets into the eyes, rinse immediately with water and see a doctor.
- The treadmill starts only when the safety key is placed on the yellow area of the console.
- During use, clip the key to your clothing to prevent accidents. If the key is pulled out, the treadmill stops immediately. Then put the safety key back in place to resume operation.

Folding the Treadmill

Before folding, turn off the power and unplug the treadmill. Lift the running deck until it locks. This saves space.

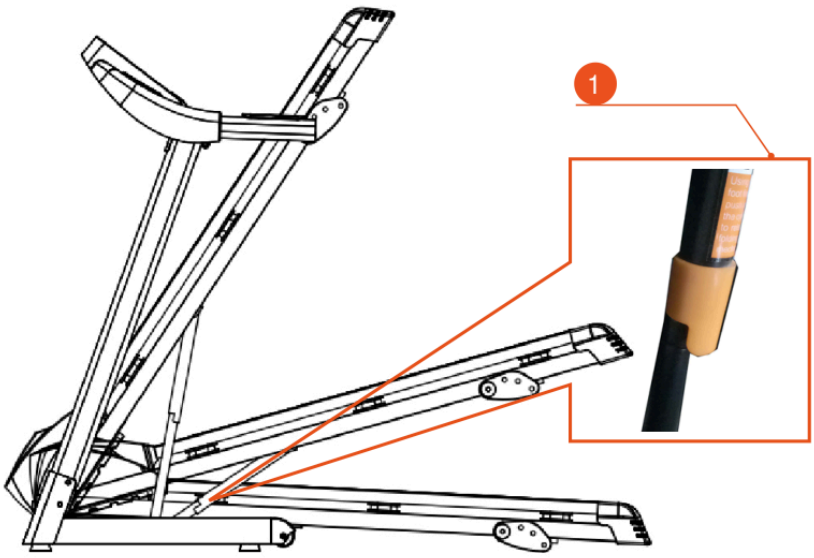

In the picture:

1. Press here

Unfolding the Treadmill

Press the support lever, hold the deck and carefully lower it so that it unfolds smoothly.

CONSOLE OPERATION

Start

The treadmill normally starts after a 5-second countdown.

Number of programs

3 manual programs, 12 preset programs, 1 FAT program.

Safety lock

If the safety key is removed, "E7" appears on the display. The treadmill stops immediately and a beep sounds. After the safety key is put back, the data is reset after 2 seconds.

Button Functions

Name	Description
"Start" / "Stop"	Start: with the power on, press the "Start" button. "0.8 km/h" appears on the display and the treadmill starts moving. Stop: while the treadmill is running, press the "Stop" button — all data will be reset, and the treadmill will stop completely and switch to manual mode.

Name	Description
Speed up / down buttons	Use these buttons to adjust the speed in 0.1 km/h steps. If you hold a button for more than 2 seconds, the speed starts to increase or decrease smoothly. The buttons are located on the handlebars.
Speed quick keys (models without incline adjustment)	Quick speed selection with the 1, 3, 5, 7, 9 and 11 km/h buttons.
Multimedia keys	Play, pause, previous and next track, and volume buttons. Music playback from USB or SD card.

Display

Name	Description
Speed	Shows the current speed.
Time	Shows the workout time and the countdown in automatic modes and programs.
Distance	Shows the distance covered in manual and automatic mode.
Calories	Shows the calories burned in manual and automatic mode.
Heart rate	Reads the heartbeat signal. The heart-shaped indicator flashes during measurement.

Heart rate measurement

After the power is turned on, hold the pulse sensors for 5 seconds. The display will show your heart rate in the range of 50–200 beats per minute. The heart-shaped indicator flashes during measurement. The data is for reference only and is not medical.

PRESET PROGRAMS

The program is divided into 10 segments, and the treadmill automatically changes the speed in each segment according to the set parameters. When the program is finished, the treadmill stops smoothly.

Mode settings

- Initial time countdown value: 30:00 minutes. Setting range: 5:00 – 99:00 minutes, in 1:00 steps.
- Initial calorie countdown value: 50 kcal. Setting range: 20 – 990 kcal, in steps of 10.
- Initial distance countdown value: 1.0 km. Setting range: 1.0 – 99.0 km, in 1.0 km steps.

Set time ÷ 10 = duration of each period.

Program / Time	1	2	3	4	5	6	7	8	9	10
P1 · Speed	3	3	6	5	5	4	4	4	4	3
P2 · Speed	3	3	4	4	5	5	5	6	6	4
P3 · Speed	2	4	6	8	7	8	6	2	3	2
P4 · Speed	3	3	5	6	7	6	5	4	3	3
P5 · Speed	3	6	6	6	8	7	7	5	5	4
P6 · Speed	2	6	5	4	8	7	5	3	3	2
P7 · Speed	2	9	9	7	7	6	5	3	2	2
P8 · Speed	2	4	4	4	5	6	8	8	6	2
P9 · Speed	2	4	5	5	6	5	6	3	3	2
P10 · Speed	2	5	7	5	8	6	5	2	4	3
P11 · Speed	2	5	6	7	8	9	10	5	3	2
P12 · Speed	2	3	5	6	8	6	9	6	5	3

Body Fat Measurement

In standby mode, press the "Program" button to go to the body mass index (BMI) test. A test icon appears on the display, and the speed window shows the parameters (Gender: 001 — Male, 002 — Female; Age — 025; Height — 170; Weight — 070; Fat test — "---").

Press the "Mode" button to go to the next step. Use the speed control knob to change the values.

When you enter the body fat test screen, the speed window shows "---" and you can start the test.

FAT	Category	Settings or test data
F-1	Gender	001 — Male / 002 — Female
F-2	Age	10–99 (25)
F-3	Height	100–200 (170)
F-4	Weight	20–150 (70)
F-5	Body fat	<19 Underweight / 19–25 Normal / 25–29 Overweight / >29 Obese

Test steps:

Hold the metal heart rate sensors with both hands for about 3 seconds. Your body fat percentage will then appear on the display. Check that the weight and height values are correct.

Note: BMI reflects the ratio of a person's height to weight, not the actual body fat percentage. Suitable for men and women. Ideal body fat level: 20–25%.

- Below 19% — underweight
- 25–29% — overweight
- Over 30% — obese

* These data are for reference only and are not a medical assessment.

ERROR CODES AND TROUBLESHOOTING

Error code	Problem description	Possible cause and solution
E1	Communication error: when the power is turned on, the connection between the lower controller and the console is lost.	Check the cable between the console and the controller. Make sure every connector is fully plugged in. If the cable is damaged, replace it.
E2	No signal from the motor.	Check that the motor cable is connected correctly. If not, reconnect it. Check the cable for damage or a burning smell. If present, replace the motor.
E5	Overcurrent protection: during operation, the controller detects a current above 6 A for more than 3 seconds.	An overload may trigger the protection or stop the motor because of jamming. Restart the treadmill. Check the motor for liquid or a burning smell — if present, replace the motor. If the controller has burned out, replace it. Check the supply voltage. If it is out of range, connect the correct voltage and test again.
E6	Surge protection: abnormal voltage or a fault in the motor power circuit.	Check whether the voltage is too low (less than 50% of nominal). Use the correct voltage and test again. If the controller has burned out, replace it. Make sure the motor cable is connected correctly.
E7	Safety key missing.	Place the safety key in the correct position (the yellow mark on the console).

CARE, STORAGE AND MAINTENANCE

Important! To extend the service life of the treadmill, take a break every 2 hours of operation.

Maintenance

Regular cleaning

Turn off the power before cleaning and use a minimal amount of water and soapy solution to prevent moisture from getting onto electrical parts.

Clean the running belt and other parts of the treadmill regularly. After each workout, wipe down the entire treadmill, including the console, with a mild soapy solution, then dry it thoroughly with a dry cloth. Simple care will keep the equipment looking great for many years. Do not use abrasive or rough brushes and cloths, as they may damage the surface of the equipment. Do not let cleaning agents or liquids get onto the surface of the equipment. Do not use harsh chemicals or solvents to clean the treadmill.

Note: This model is made of durable materials. The plastic parts are made of strong, chemically resistant ABS, the frame is made of high-strength steel with an industrial powder coating to protect against corrosion, and the metal parts have an anti-corrosion coating. However, keep in mind that sweat left on the surface of the treadmill can be highly aggressive to the materials if not removed promptly.

Lubricating the running belt

Use only lubricants recommended by the manufacturer, such as silicone treadmill lubricant. Other types and compositions of lubricants may damage the equipment.

Lubrication frequency

- Light use (less than 3 hours per week): lubricate once every 10 months.
- Heavy use (more than 7 hours per week): lubricate every 2–5 months.

Lubrication procedure

Lift the running belt, locate the caps and spread the lubricant evenly along the entire length of the belt.

After applying the lubricant, run the treadmill at 4–5 km/h and walk on it for a few minutes so that the lubricant spreads evenly over the deck.

Avoid over-lubrication

Do not apply too much lubricant, as this can make the belt too slippery and dangerous. Remove excess lubricant with a clean towel.

Running Belt Adjustment

Check and adjust the tension and alignment of the running belt to prevent wear and ensure safe operation.

Checking belt alignment

Make sure the treadmill is placed on a level surface. Run the belt at 3–8 km/h and watch how it moves. If the belt drifts to the left or right, use the adjustment bolts to correct its position.

In the picture:

1. Belt drifting to the left
2. Belt drifting to the right

Belt drifting to the left

- Turn the left adjustment bolt 1/2 turn clockwise.
- Then turn the right adjustment bolt 1/2 turn counterclockwise.
- Check the belt position after 1–2 minutes. If the belt has not returned to the center, repeat the procedure.

Belt drifting to the right

- Turn the right adjustment bolt 1/2 turn clockwise.
- Then turn the left adjustment bolt 1/2 turn counterclockwise.
- Check the belt position after 1–2 minutes. Repeat the adjustment if necessary.

Adjusting belt tension

- If the belt is too loose, it may slip during operation. To check the tension, run the treadmill at 1 km/h and press lightly on the belt with your foot.
- If the belt stops while the motor and rollers keep running, the tension is too loose and must be tightened.
- Turn the adjustment bolts at both ends of the belt 1/2 turn clockwise. Make sure you turn both bolts the same number of times for even tension.
- Check the tension again and make sure the belt does not slip but is not overtightened.

Avoid overtightening

- Do not overtighten the running belt, as this puts excessive pressure on the front and rear roller bearings, causing squeaking and accelerated wear.
- With correct tension, you can slightly lift the edges of the belt by 50–70 mm on both sides.

Storing the Treadmill

Recommended storage and operating conditions

- Temperature: +10...+35 °C.
- Humidity: 50–75%.
- Acclimatization: if the treadmill has been stored at low temperature or high humidity (there are signs of condensation), keep it under normal conditions for at least 2–4 hours before use. Only then may you start using the treadmill.

WORKOUT TIPS AND RECOMMENDATIONS

Warm-up and Cool-down

A successful exercise program consists of three parts: warm-up, cardio training and cool-down.

The warm-up is a very important part of a workout. It should be done before every workout. Warming up helps warm the body, stretch the muscles and allow the body to adapt to more intense exercise. Repeating the warm-up at the end of the exercise can help relieve muscle soreness.

We suggest doing the appropriate warm-up and cool-down exercises according to the following scheme:

Head rolls

First tilt your head toward your right shoulder, stretch your neck and rotate your head once clockwise and once counterclockwise; then tilt your head toward your left shoulder and make one counterclockwise rotation. Repeat.

Shoulder lifts

Raise your left shoulder and make 5 backward rotations; then raise your right shoulder and make 5 backward rotations, alternating sides.

Side stretch

Raise your arms above your head, then grasp your right wrist with your left hand and reach upward until you feel your right arm fully stretched. Hold for 5 seconds before switching to the other arm.

Quadriceps stretch

Holding onto a wall with your right hand for balance, pull your left foot back with your left hand, bringing the heel as close to your buttock as possible. Hold for 15 seconds, then repeat with the other leg.

Inner thigh stretch

Sitting on the floor, put the soles of your feet together, clasp them with both hands and pull them in as close to your body as possible. Slowly press down on both heels and hold this position for 15 seconds.

Toe touch

Slowly bend forward, relax your back and shoulders and reach for your toes. Bend as low as you can and hold the position for up to 15 seconds.

Hamstring stretch

Sit down, straighten your right leg and bend your left leg. Hold your left ankle with your left hand and pull it inward so that your left foot is as close to your body as possible, with the sole against the inner side of your right thigh. Then lean your body forward and reach both hands toward your toes — the deeper the stretch, the better. Hold this position for 15 seconds, then switch legs.

Calf stretch

Lean against a wall with both hands, tilt your body at a 45-degree angle to the floor and alternately move your left and right legs back, as if walking.

WARRANTY

The translation of this section has not been reviewed yet. The official text is in Russian.

Genau guarantees the high quality and reliability of its products. We strive to offer only the best, which is why all of our equipment comes with a warranty.

Attention! Find the official A4 warranty card in the box and keep it for the entire period of use of the equipment.

Note: If you did not find the warranty card in the box, please contact the service center.

Warranty Terms

1. The warranty period starts from the date of sale.
2. The warranty covers defects caused by manufacturing faults or defective materials.
3. Warranty service is carried out at authorized service centers.
4. If the product breaks down during the warranty period, the customer must bring this warranty card and the complete product to a service center for diagnostics and repair.
5. If the warranty claim is confirmed, the product will be repaired or replaced free of charge.
6. The warranty does not cover the following cases:

- mechanical damage caused by improper use or transportation;
- damage caused by liquids, fire, chemicals or other external factors;
- failures caused by not following the operating instructions;
- modifications to the design or repairs carried out by unauthorized persons without the approval of the Service;
- consumables and components with a limited service life (belts, batteries, etc.).

Warranty claims

To receive warranty service, the customer should contact the seller (the place where the equipment was purchased).

Full Genau warranty card

SPECIFICATIONS

Parameter	Value
Input voltage	AC 220–240 V (50/60 Hz)
Motor power	2.8 hp
Speed	0.8–14.8 km/h
Running belt size	1150×420 mm
Max. user weight	120 kg
Dimensions in use	1475×690×1210 mm
Functions	Running

Manufacturer: Zhejiang Lijiujia Sports Equipment Co., Ltd. ADD No.88 Yuegui South Road, Xicheng Street, Yongkang, Zhejiang, China.

SERVICE

For questions about assembly, operation and warranty, please contact Genau service in Kyrgyzstan.

Genau GmbH LLC (ОсОО «Генау ГМБХ»), Kyrgyzstan. Phone: +996 778 639 000

Official website genau.kg